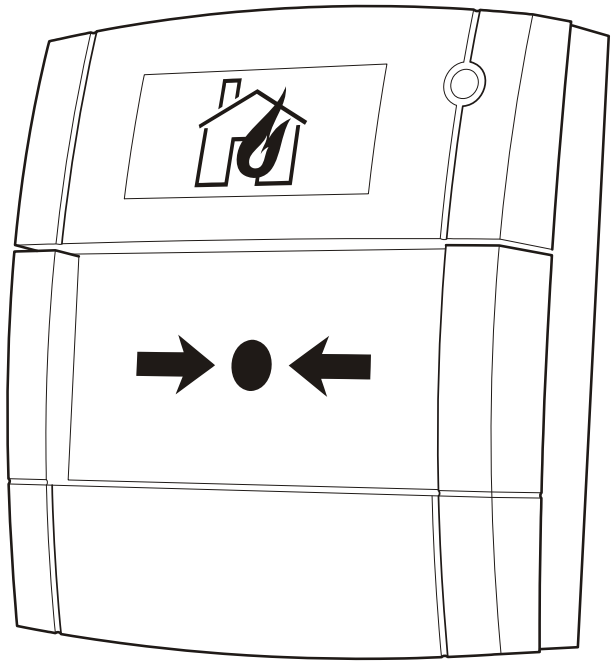

2823-01

Brief description

The ZP785-3 Analogue Addressable Callpoint is used to manually initiate a fire alarm. It is designed for indoor use and may be surface or recess mounted.

The red LED on the front indicates the status of the ZP785-3 (off = normal, flashing = active).

Specifications

General information	
Designation	ZP785-3 Analogue Addressable Callpoint
Model number	ZP785-3
Part number	2009
Environmental	
Application	Indoor use
Environmental rating	IP24D
Operating temperature range	-10 to 50 °C
Operating humidity range	20% to 95% RH (non-condensing)
Primary supply	
Operating voltage	19.5 to 20.5 VDC pulsed address line
Current (quiescent)	400 µA
Current (activated)	450 µA
Mechanical details	
Construction	Moulded ABS
Colour	Red
Dimensions (W x H x D)	89 x 93 x 27.5 mm
Weight	125 g
Mounting method	Surface or recessed

Accessories

- 4-way connector (included)
- Test key (included)
- Spare glass: Z-EN54-G
- Surface mounting box: Z-CPSB-1
- Recessed mounting: 75 x 75 mm industry standard
- Electrical box

Manufacturer traceability

A barcode label is affixed to each product (see example below). This label reflects, amongst other things, the date of manufacture of the product in the form YYDDD.

These numbers are interpreted as follows:

YY = year of manufacture

DDD = day of manufacture

For example the numbers 07134 would indicate that the product was manufactured on the 134th day of the year 2007, that is 14th May 2007.

Comsec Protection Systems.
26 Stadium Business Park, Dublin 11, Ireland
Tel +353 1 8853008 Email info@comsec.ie www.comsec.ie

www.gesecurity.eu • Copyright © 2007 GE Security B.V. All rights reserved

Installation instructions

Surface mounting

Figure 1: Using Z-CPSB-1 surface mounting box

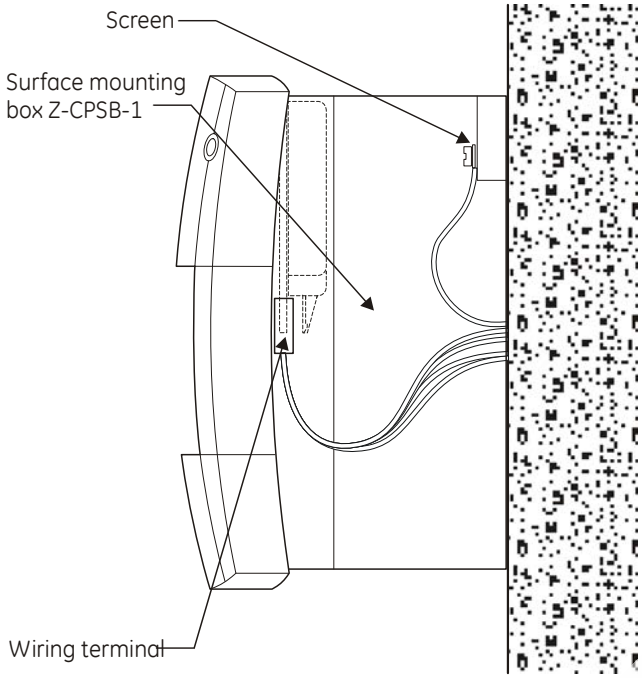

Surface mount side view 3952-01

Recessed mounting

Figure 2: Using standard electrical box

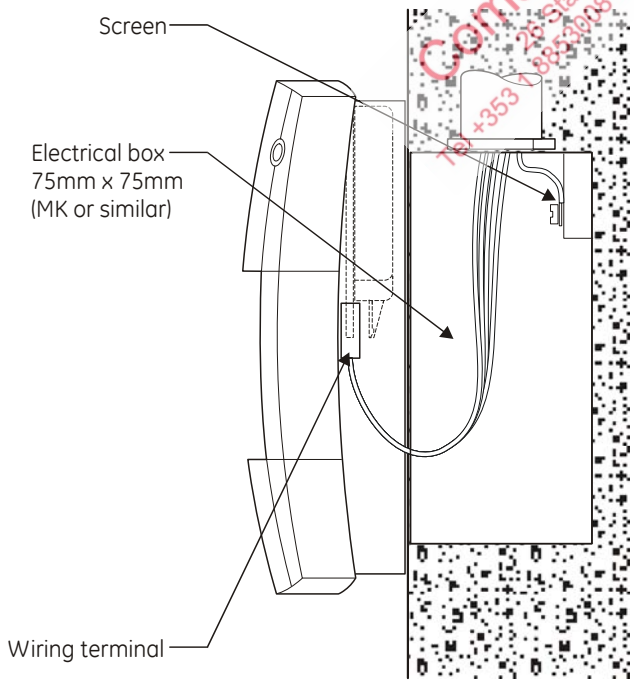

Recess mount side view 2822-01

Address switch settings

SW1 is used to assign device addresses. Each switch segment has a decimal value as shown in Figure 3 below.

Figure 3: ZP785-3 address switch

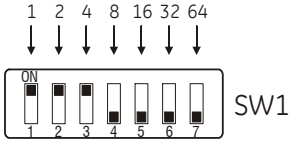

Device address = 007 2825-01

The sum of all the switch segments in the ON position determines the device address. You can set the device address for any value between 001 and 127 that is not used by another device on the same loop. For example, to select a device address of 007 you must set SW1-1, SW1-2, and SW1-3 to the ON position and the remaining switch segments to the OFF position.

Wiring diagram

Figure 4 shows the terminal block connections for wiring the ZP785-3.

Figure 4: ZP785-3 wiring diagram

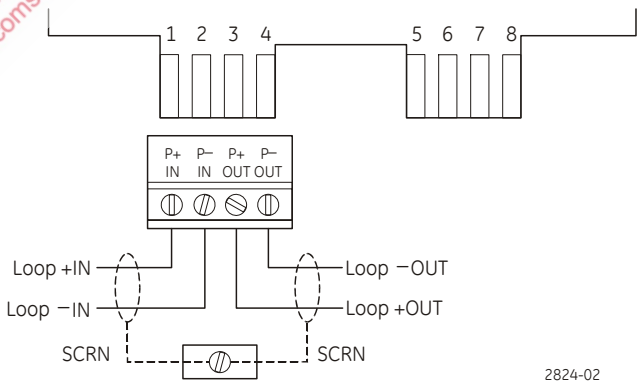

2824-02

Comsec Protection Systems
26 Stadium Business Park Dublin D11 F481
Tel +353 1 8853008 Email info@comsec.ie www.comsec.ie

www.gesecurity.eu • Copyright © 2007 GE Security B.V. All rights reserved

Figure 5 shows how to:

- Perform a test
- Replace the glass/resettable element
- Reset the device

Figure 5: Operating functions

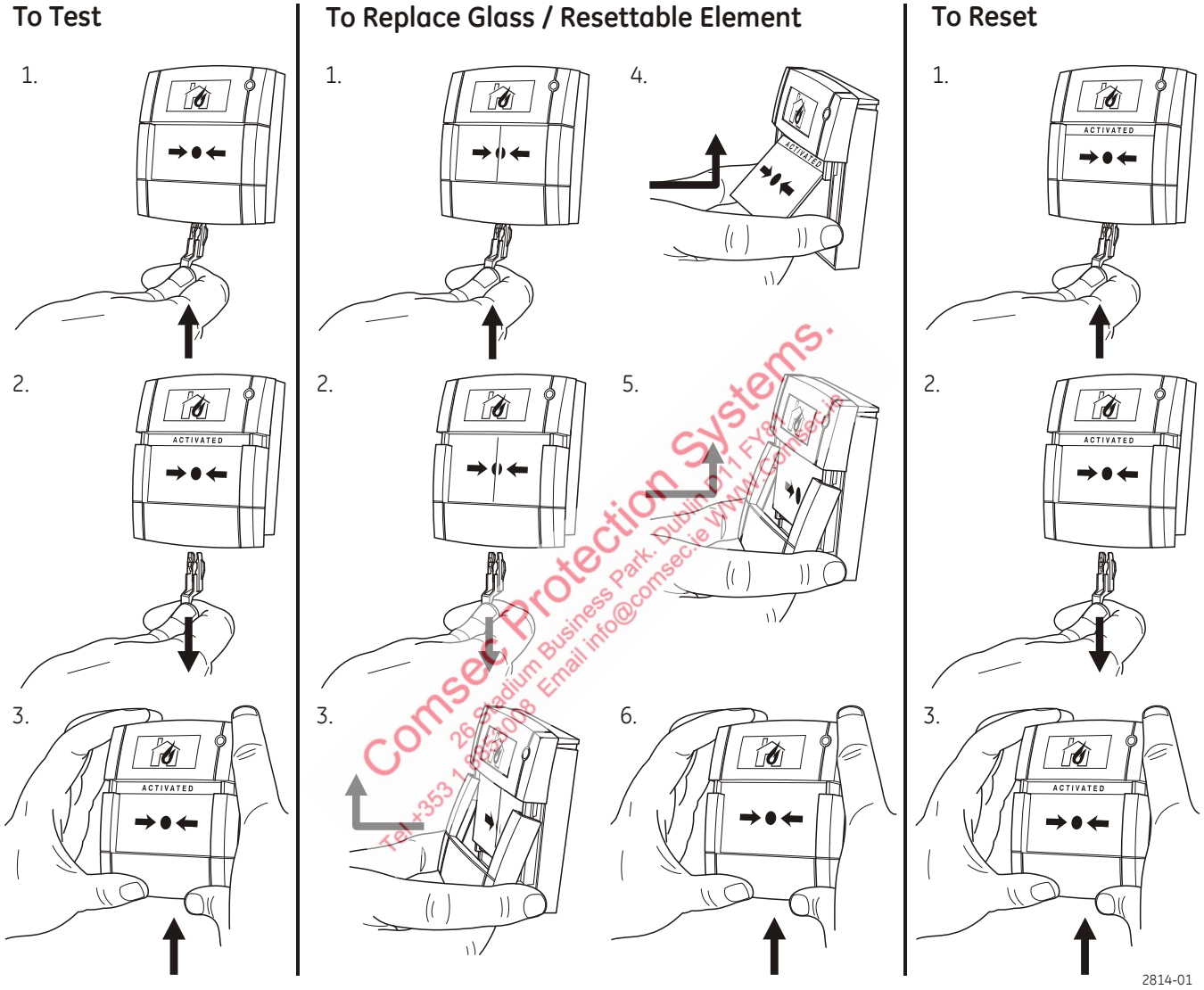

Comsec Protection Systems.
26 Stadium Business Park, Dublin 11 FY81
Tel: +353 1 8553008 Email info@comsec.ie WWW.Comsec.ie

www.gesecurity.eu • Copyright © 2007 GE Security B.V. All rights reserved

Comsec Protection Systems.
26 Stadium Business Park. Dublin D11 FY81
Tel +353 1 8853008 Email info@comsec.ie WWW.Comsec.ie

www.gesecurity.eu • Copyright © 2007 GE Security B.V. All rights reserved