Mule Mug

PRODUCT SPECIFICATION

46/X-040

Features & Benefits

- Elegant copper mug from presenting the Moscow Mule
- Stainless steel material with copper-plated exterior

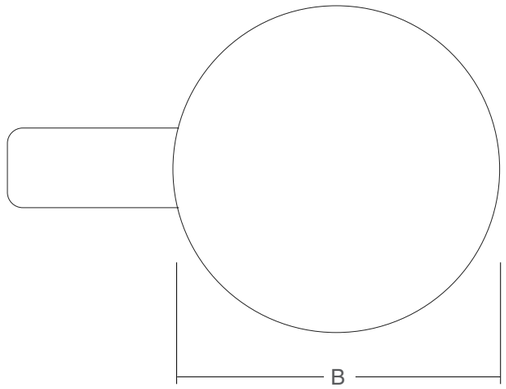

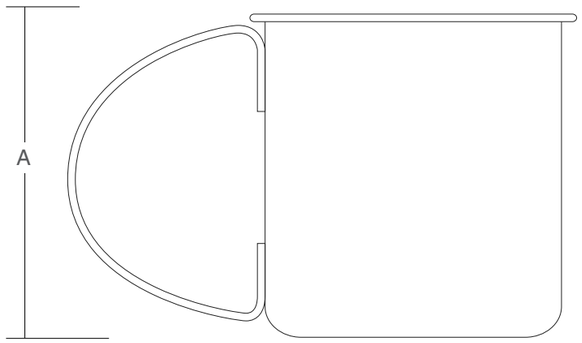

SPECIFICATIONS	
Item Number	46/X-040
Dimensions	
A - Length	90 mm (3.55 in)
B - Width	90 mm (3.55 in)
Weight	400 grms (0.85 lbs)
Construction	Stainless-steel

© Copyright Überbartools™ 2016 | E+EO

Mule Mug

PRODUCT CARE GUIDE

Mule Mug Tin Anatomy	Washing & Caring

1

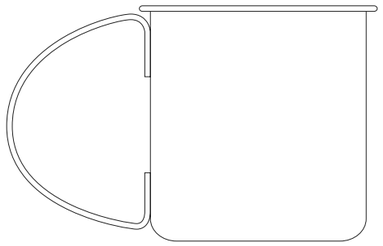

2

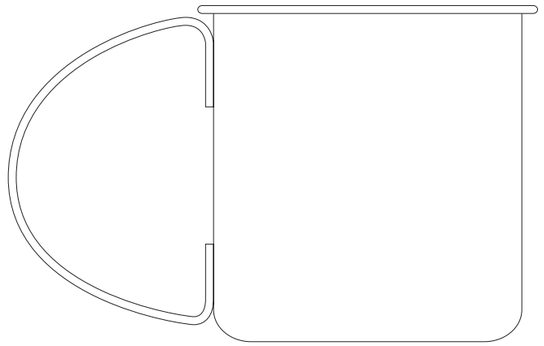

The **Mule Mug** can be cleaned by wiping with a soft cloth that has been immersed in warm/soapy water. Ensure that all tools are entirely dry after washing

WARNING
NEVER CLEAN WITH ABRASIVE MATERIAL OR HARSH CLEANING CHEMICALS/SOLVENTS THOROUGHLY DRY AFTER CLEANING

WARNING
NEVER PLACE ANY PART INTO A GLASS WASHER, DISH WASHER OR BOILING WATER

© Copyright Überbartools™ 2016 | E+EO