2014-21 GX HAMILTON CONVERSION KIT WIRING DIAGRAM

WITH OEM 360 CAMERAS

HAMILTON MOTOR COMPANY

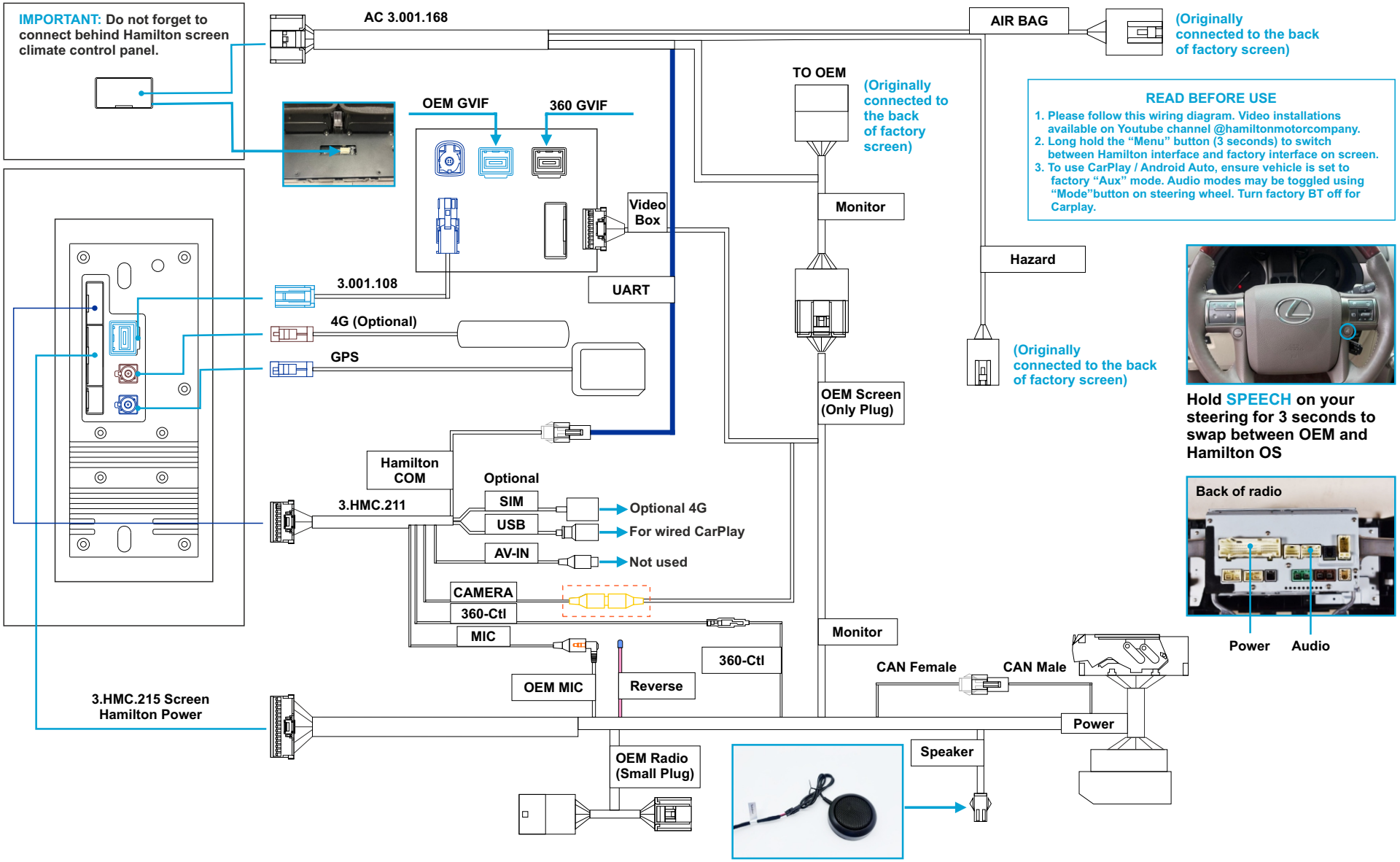

READ BEFORE USE

1. Please follow this wiring diagram. Video installations available on Youtube channel @hamiltonmotorcompany.
2. Long hold the "Menu" button (3 seconds) to switch between Hamilton interface and factory interface on screen.
3. To use CarPlay / Android Auto, ensure vehicle is set to factory "Aux" mode. Audio modes may be toggled using "Mode"button on steering wheel. Turn factory BT off for Carplay.

Hold SPEECH on your steering for 3 seconds to swap between OEM and Hamilton OS

support@hamiltonmotorcompany.com (919) 858-2890