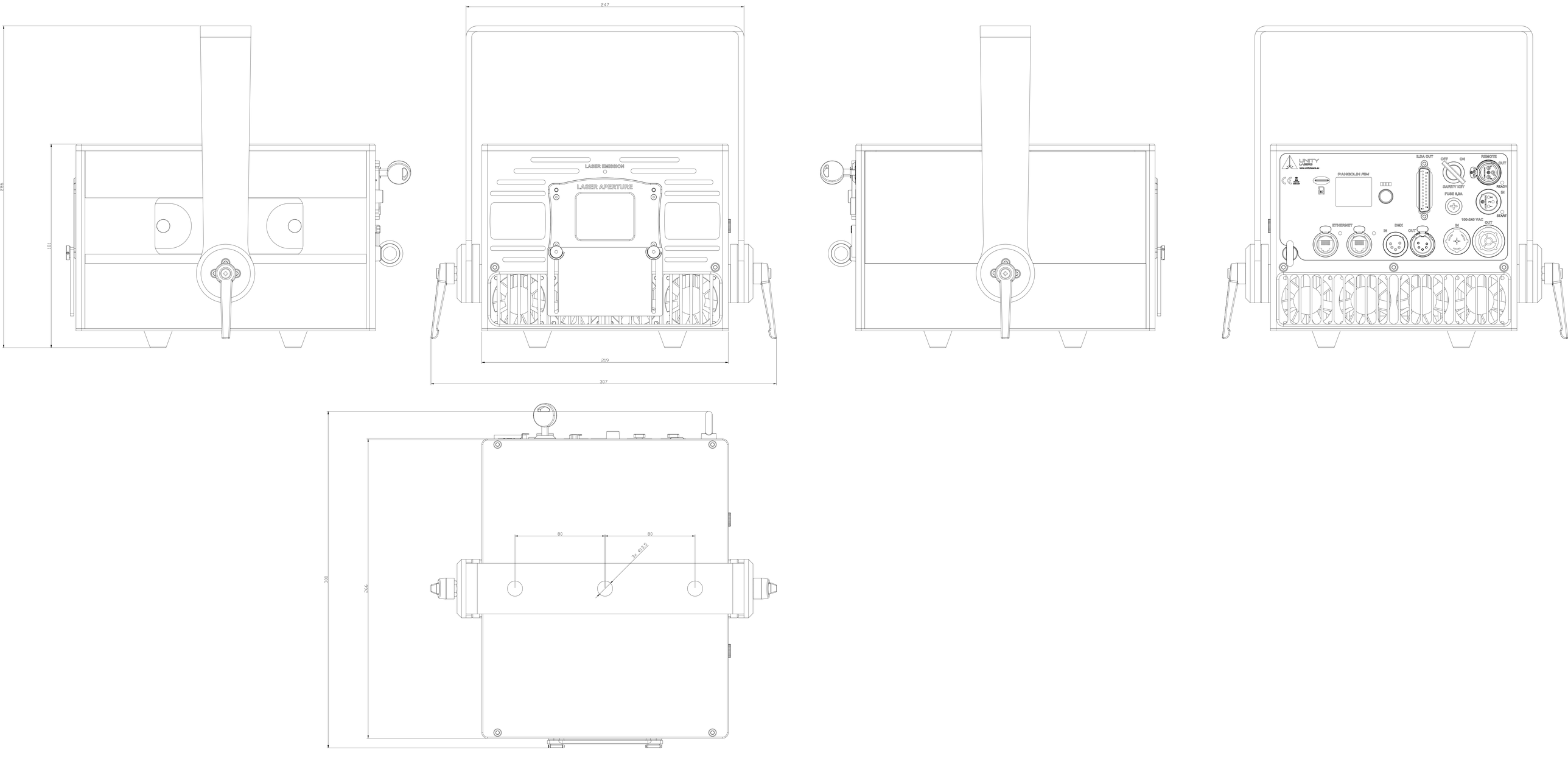

247
286
181
LASER EMISSION
LASER APERTURE
219
307
80
80
3x Ø13.5
300
266
UNITY LASERS
PANKOLIN PRM
ILDA OUT
OFF
ON
REMOTE
OUT
SAFETY KEY
FUSE 6,3A
READY
IN
START
100-240 VAC
ETHERNET
IN
DMX
OUT
IN
OUT