FAYE PENDANT

RTO LIGHTING

SPEC SHEET

FAYE PENDANT

DESCRIPTION

The pendant version of our angular Faye sconce combines the cast bronze fixture and hand blown glass shade with hand-bent chain. Group this fixture above a dining table or in an entryway for a refined display.

LAMPING

We suggest the use of LED bulbs under 40 Watts. In order to reduce the consumption of electricity and to ensure the lifetime guarantee of our products. Incandescent bulbs emit heat that can cause damage to the luminaire overtime.

E26 Lamp Base. 120VAC

Ships with complimentary Tala Globe LED bulb.

SPECIFICATIONS

Materials: Cast Bronze, Glass, Brass (All finishes are lacquered).

List price includes 36" overall drop. Longer drop beyond 36" can be customized for an additional fee. Please inquire.

Hardwired pendant only.

Dimming compatible.

This item is made-to-order. Please see our website for current production lead times.

METAL FINISH

Cast Bronze

Oil Rubbed Bronze

Finish samples available upon request.

GLASS FINISH

Clear Glass

CERTIFICATIONS

cUL, UL Certified.

CE certification available upon request.

Dry location rated.

PRODUCT CARE

Please care for the brass pieces with a soft cloth. Avoid using any abrasive cleaners or products. Natural patina process is quickened by touch and exposure.

Gloves are recommended for installation.

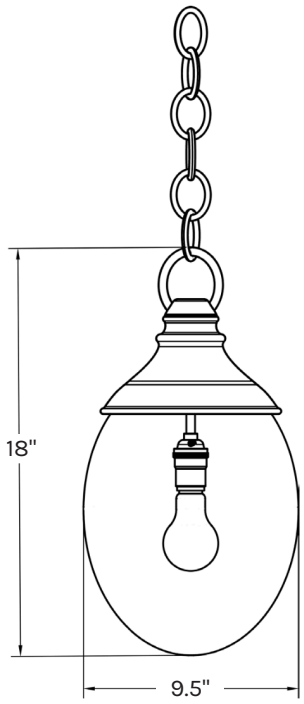

DIMENSIONS

Overall Dimensions:

- 9.5" W x 18" H
- Shade: 9.5" W x 12.5" H
- Canopy: 5" Diameter
- Overall Drop: 36"
- Weight: 15 lbs