Economy Ladder

- Tubing: 1.90" OD
- Wall Thickness: .049"
- Stainless Steel: 304 or 316L Marine Grade* (add –MG to part number)
- Treads: LTDF-101 Plastic (Econoline) or LTDF-103 Stainless Steel (Elite)
- Bends: 6" Radius
- Options: Powder-coating and SealedSteel Salt Friendly available
- Recommended anchors: AS-100B (order separately)
- Recommended escutcheon: EP-100F (order separately)

* Minimum requirement for salt pools is 316L Marine Grade

Econoline	Shipping Weight	Elite	Shipping Weight	Description	Shipping Length	Shipping Width	Shipping Height
VLLS-102E	21 lbs	VLLS-102S	23 lbs	2-step ladder	61"	29"	2"
VLLS-103E	23 lbs	VLLS-103S	25 lbs	3-step ladder	61"	29"	2"
VLLS-104E	24 lbs	VLLS-104S	27 lbs	4-step ladder	66"	29"	2"

Notes:

- For stock powder-coated products, see page 72. For stock SealedSteel Salt Friendly products, see page 73.
- Frames extend 6½" from the pool wall. Frame is secured to the pool deck with two anchor sockets on **20" centers (Elite model) or 19" centers (Econoline model)**. The lower end of the frame is bent to meet the pool wall and fitted with two white rubber bumpers (WRB-100A)
- For safety steps substitute the letter T at end of part number. For example, VLLS-102T for a two-step safety ladder.

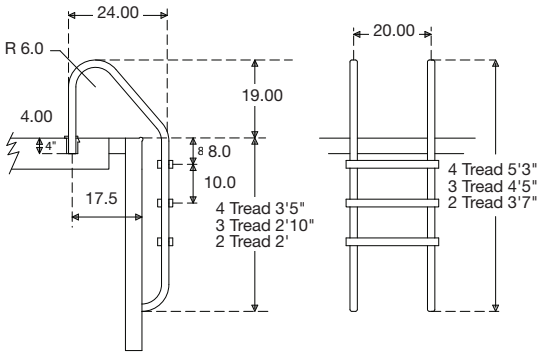

Copyright © 2013, S.R.Smith, LLC. All rights reserved.