This hydraulic gear hobbing machine with multi programme control can cut gears economically and rationally. Rapid and simple changeover of the machine to the required workpiece reduces non productive time to a minimum.

Type 132-02

Hydraulic gear hobbing machine with multi-programme control

9750

DISTRIBUTED EXCLUSIVELY IN U.S.A. BY:

ILLINOIS TOOL & INSTRUMENT

DIVISION ILLINOIS TOOL WORKS INC.

2501 NORTH KEELER AVENUE • CHICAGO, ILLINOIS 60639

CApitol 7-2200

MIKRON®

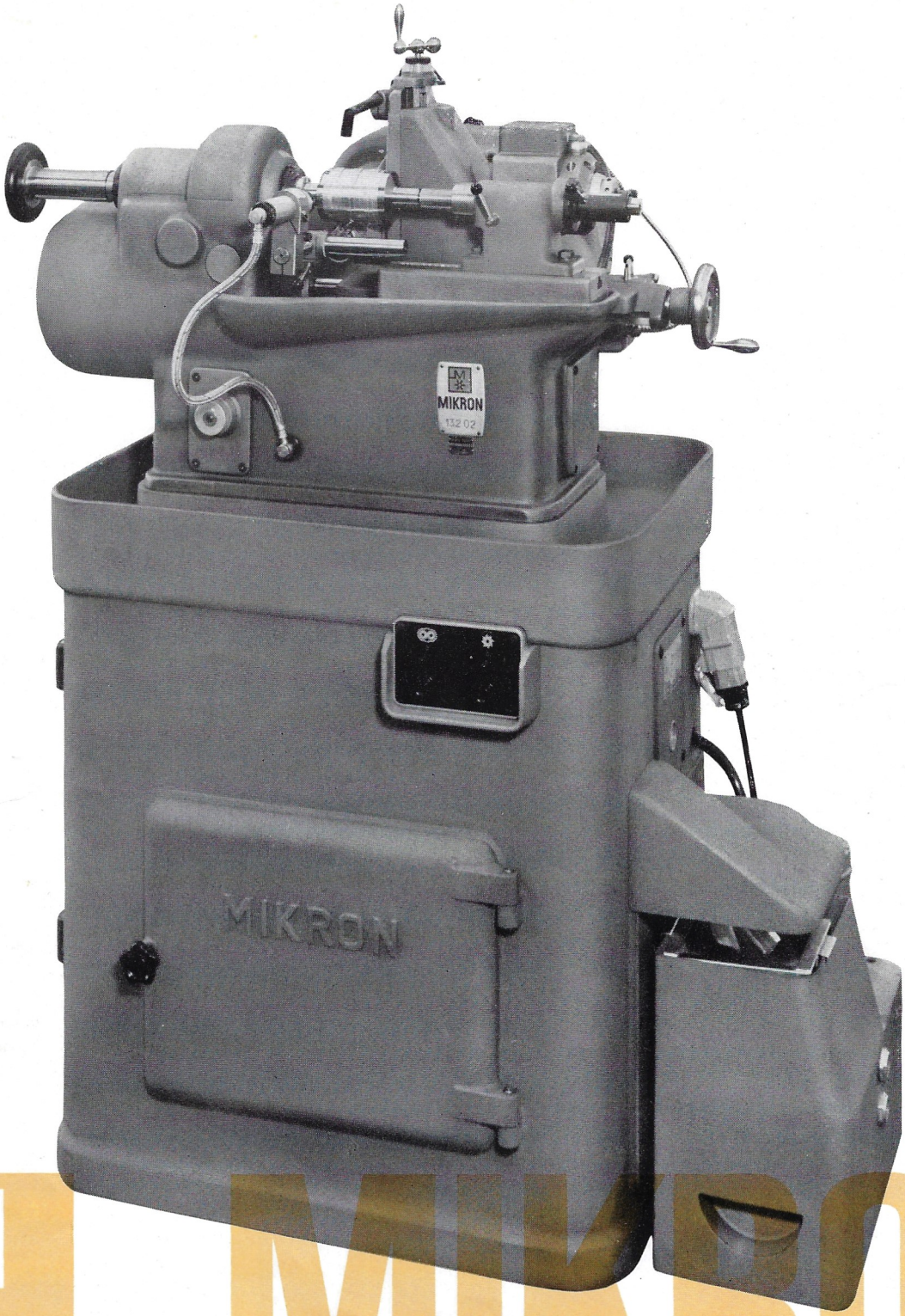

MIKRON®

Operating principle

The type 132-02 is a multi-purpose gear hobbing machine with a hydraulically-controlled, automatic hobbing cycle. Special features are high production with optimum precision and surface quality. The machine 132-02 can be employed for three different hobbing programmes:

1. Plunge-cutting with subsequent longitudinal feed and hob return to its initial position.
2. Plunge-cutting to the final tooth depth and hob return to its initial position.
3. Plunge-cutting with subsequent longitudinal feed, quick travel of hob to the next identical gear, longitudinal feed and hob return to its initial position.

Programme selection is undertaken extremely simply merely by changing the position of the key switch.

Three different hobbing Methods

1. Plunge-cutting with subsequent longitudinal feed

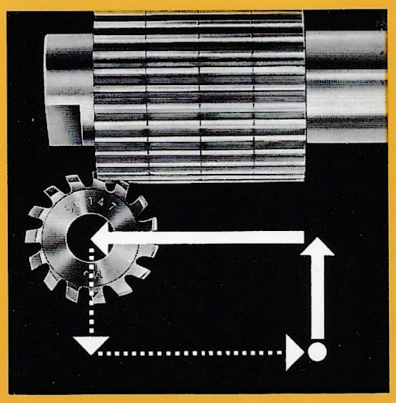

2. Plunge-cutting

3. Hobbing with intermediate rapid traverse

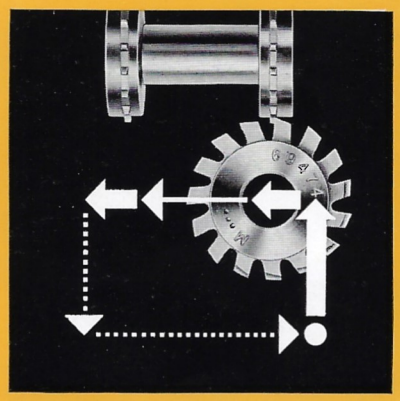

Starting position

Hobbing feed

Intermittent quick travel

Quick return to initial position

Spheres of application

Using the time and labour saving method of plunge-cut longitudinal hobbing (1) it is possible for straight teeth to be cut in spur wheels, pinions, tooth segments etc., which are employed in the construction of meters and instruments, typewriters and accounting machines, and instruments for rockets, and radar control equipment.
Wheels and segments, the width of which does not exceed 1/8", together with worm wheels can be most efficiently manufactured using the plunge-cut method (2) without subsequent longitudinal feed. In plunge-cutting the hobbing distance is equal to tooth depth and the time lost during longitudinal hobbing whilst the cutter 'runs-in', is saved with this method.
If required machine 132-02 can—at slight extra cost—be equipped with a programme control with intermediate rapid traverse (3) to deal with workpieces which posses several gear rims having the same diameter and the same number of teeth on the same axis but placed at some distance from each other. After the first gear has been hobbed, this mechanism automatically provides rapide traverse of the hob to the next gear to be cut whereupon the feed is automatically switched over.
To illustrate this, a film reel can be completely hobbed with the aid of this special accessory.

High capacity with optimum precision

The hydraulic system employed permits plunge-cutting against a fixed, mechanical stop and consequently always guarantees accuracy in diameter. As with all Mikron® machines, highest precision in tooth cutting is obtained with type 132-02.
We manufacture our machines in accordance with tolerances which are far finer than Schlesinger tolerances. Consequently we are able to guarantee the quality of the end product in accordance with the tooth cutting tolerances, Class 5—6 as laid down in DIN 3962.

Short setting-up times

On average only 10 minutes are required to change machine type 132-02 over to other components, because it is only necessary to change the hob, the workpiece holder and the indexing gears.
The machine is equally suited for conventional and climb hobbing. The changeover is extremely simple: It is merely necessary to change the direction of rotation at the main switch and to change over a valve on the feed cylinder.

Simple operation, high reliability

Thanks to the automatic hobbing cycle, operation is extremely simple. By actuation of a press button the motor and feed are started simultaneously. After the operation has ended the hob reverts rapidly to its initial position. All actuating devices are clearly arranged. The machine is easily accessible from all sides. After a short training period it can be operated rapidly and reliably by semi-skilled labour.

Long life

Thanks to robust design all components are extremely rigid, thus permitting operation without vibration. This gives the further advantage that, once set up, the machine needs hardly any subsequent adjustment. It will furthermore function extremely accurately even after being highly stressed for many years in multiple-shift continous operation.

Installation is simple

Apart from supplies of electricity, no structural alterations are required to install the machine.

Technical data

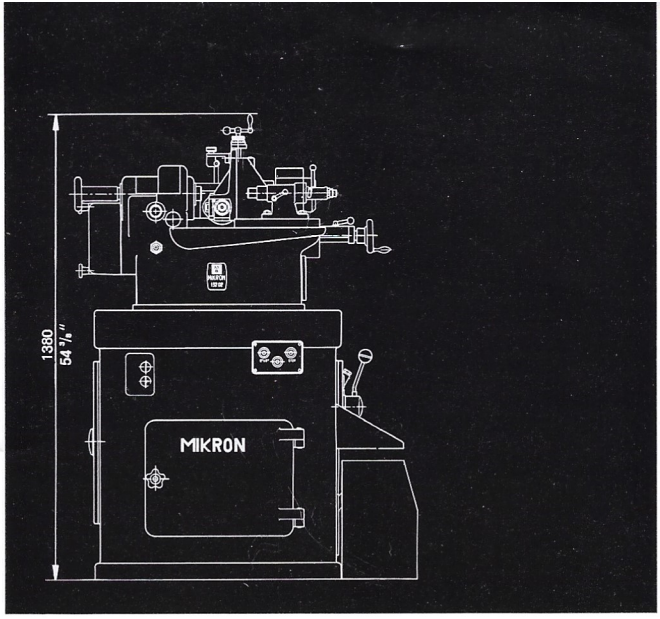

Maximum diameter which can be hobbed . .	4"
Maximum length which can be hobbed . . .	4"
Number of teeth	6–400
Maximum pitch in steel	15 D.P.
Maximum pitch in brass and light metal . . .	12 D.P.
12 hob revolutions: Geometrically graded between	200–2400 r.p.m.
Feed: a) Horizontal b) Plunge-cutting Hydraulically and infinitely variable between 0.05 to 1 mm per workpiece revolution	
Drive: Main motor	1,5 HP
Coolant pump	0,1 HP
Hydraulic system	0,1 HP
Net weight , ...	9 cwts
Gross weight	12 cwts
Crate dimensions for shipment by rail or ship	44" × 44" × 66" high

1 Knob for infinitely variable feed regulation

2 Deburring tool (hydraulic)

3 Hob

Cutting oil supply (variable)

Workpiece

6 Handle for adjusting hobbing depth

7 Tailstock with bayonet clamping device (if required this can be replaced by a pneumatic clamping device)

8 Knob for infinitely variable regulation of plunge-cut speed

9 Knob for restricting plunge-cut depth

10 Handwheel for manual adjustment of hob slide

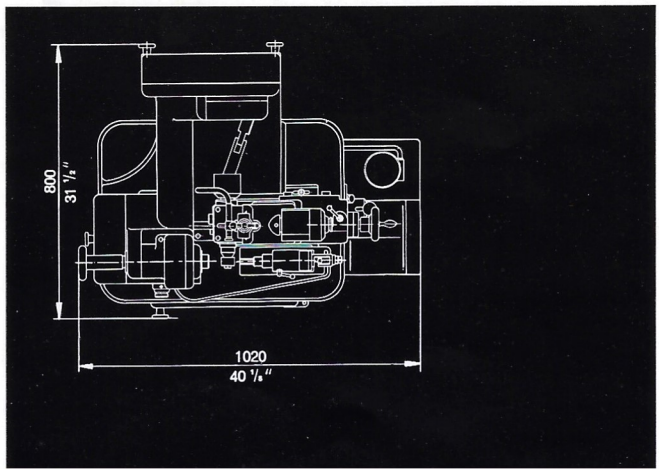

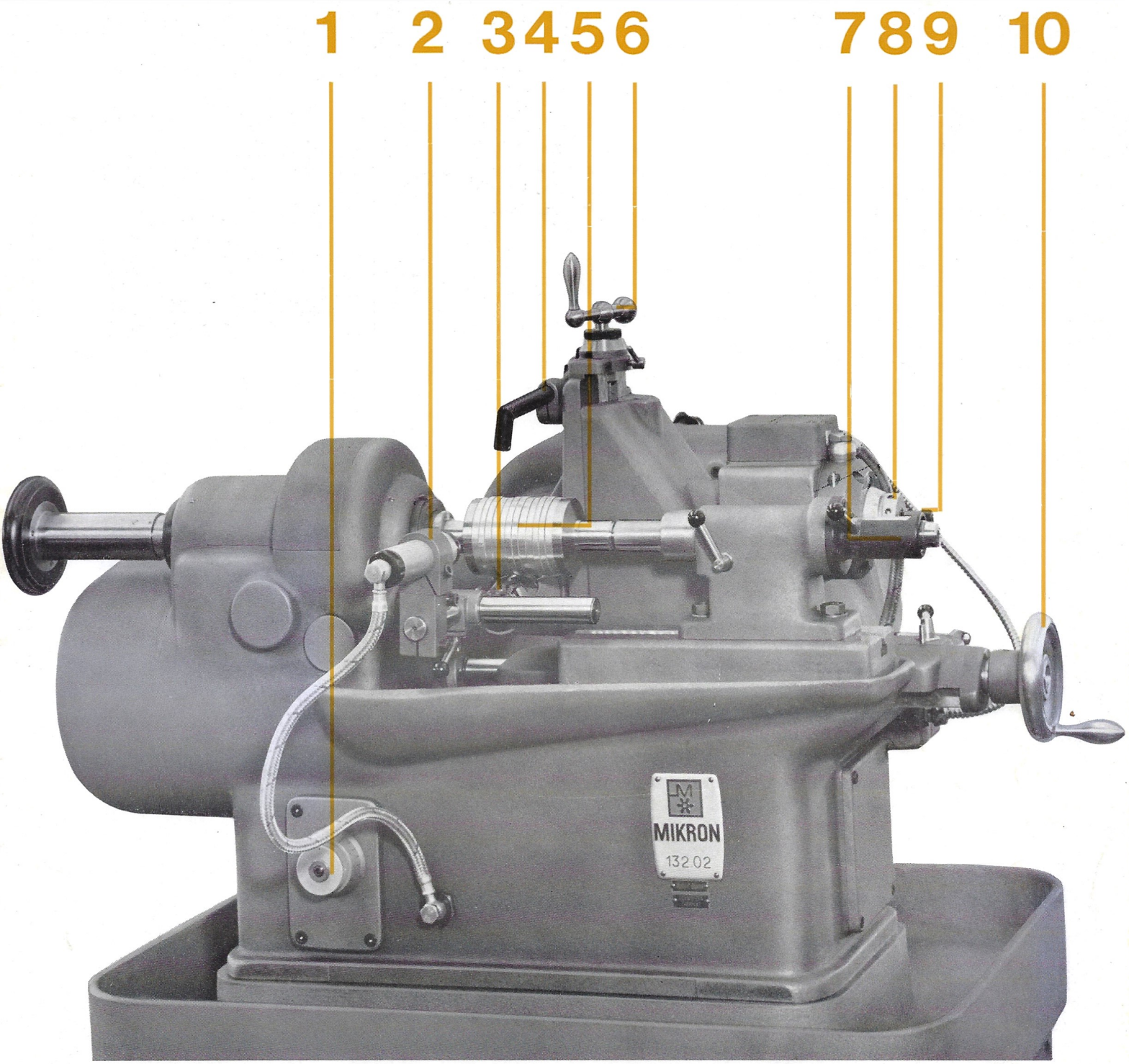

Mikron® over 50 years of economic gear cutting with maximum accuracy

Design characteristics

Arrangement of hob

Thanks to the horizontal position of the workpiece with the hob beneath it, maximum accessibility to the workpiece and satisfactory chip removal is guaranteed. The main head stock spindle and hob spindle are connected by a minimum of extremely accurately machined transmission components. This simple design guarantees maximum indexing accuracy.

The indexing gear drive

The indexing gear drive to which extreme importance attaches with respect to the accuracy of the end product is produced on a special machine with extreme care. To reduce wear to a minimum, the worm in this gear drive is hardened and ground. The indexing gears are clearly arranged in a gearbox (Fig. 1).

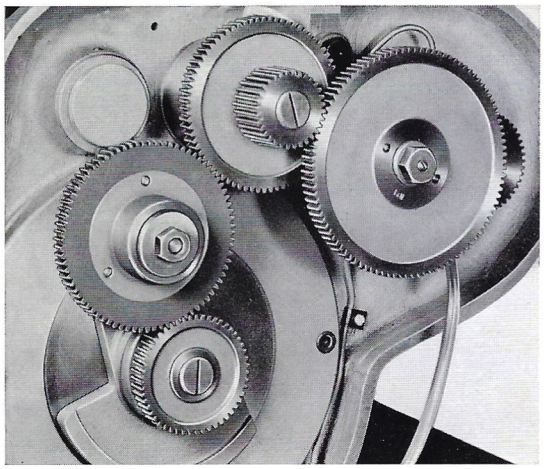

1

Feeds: Plunging of the hob

The plunging and longitudinal feed operations are variable individually and infinitely between 0.05 and 1 mm per workpiece revolution.
During plunge-cut hobbing the necessary exit time after the tooth depth can be controlled by a variable-delay relay (Fig. 2).

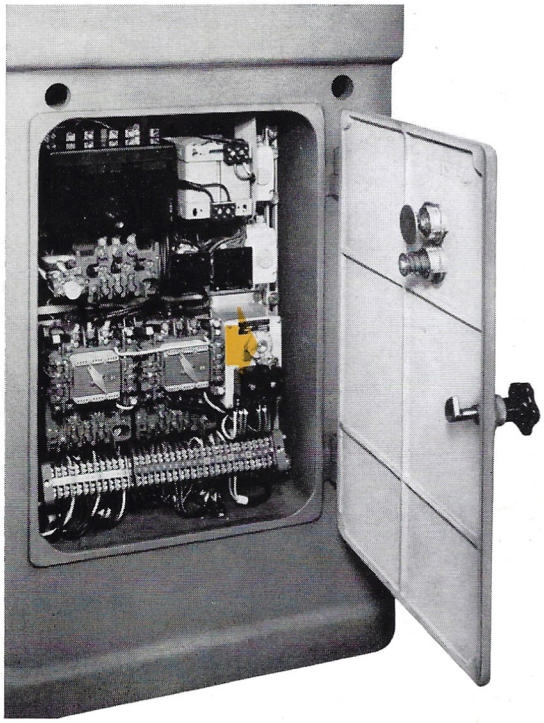

2

De-burring tool

Subsequent de-burring of workpieces is unnecessary, this work being carried out by an hydraulically-actuated de-burring tool (Fig. 3) which is automatically fed to the workpiece during the hobbing operation.

Workpiece holders

Normally workpieces are clamped on special mandrels with extremely high concentricity using a bayonet clamping device, or if required a pneumatic clamping device. Collets and collet lever draw-in attachment are also available.

Coolant, supply, centralised lubrication

Type 132-02 is supplied with a large coolant reservoir which is installed at the side of the machine. A powerful electric pump ensures that the hob and workpiece are well supplied with coolant and thus the heat generated during machining is efficiently dissipated. The centralised lubrication system lubricates all guideways and plain bearings with the exception of the hob spindle.

Pedestal and housing

The surfaces of our machines are neither painted nor varnished, but instead are treated using a metallising method which has been tested for years. This long-lasting protection against corrosion ensures that the machine maintains its good appearance for many years.

Standard design

The standard type of hobbing machine 132-02 is supplied with a pedestal for individual drive. This comprises a motor (mounted on vibration-proof rubber elements) and electrical equipment for three-phase current up to 500 volts, 50–60 C/s; hydraulic unit (incorporated in pedestal); coolant unit, together with numerous accessories; three pairs of intermediate wheels, 7 change wheels for hob speeds, 1 complete hydraulic de-burring attachment, 1 set of tools, 1 oil gun, 2 cans of oil. On delivery the machine is set up for a component to the customers choice.

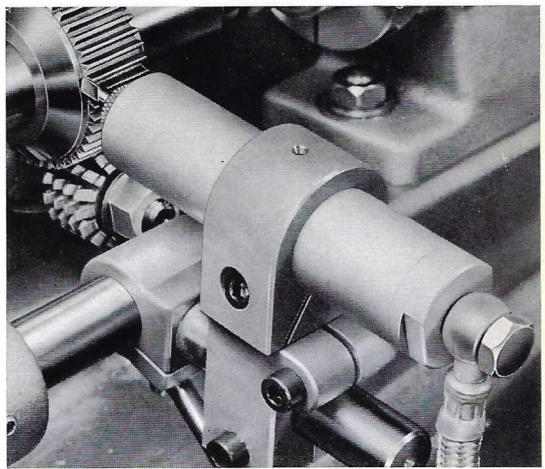

3

Supplementary equipment

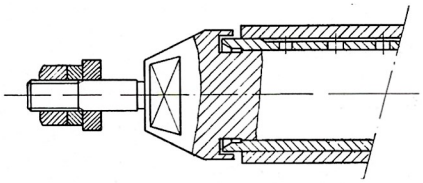

Hob spindle for hob with 8 mm diameter hole

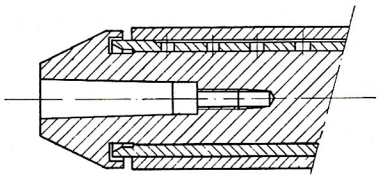

Hob spindle for shank hob
(when cutting worm wheels)

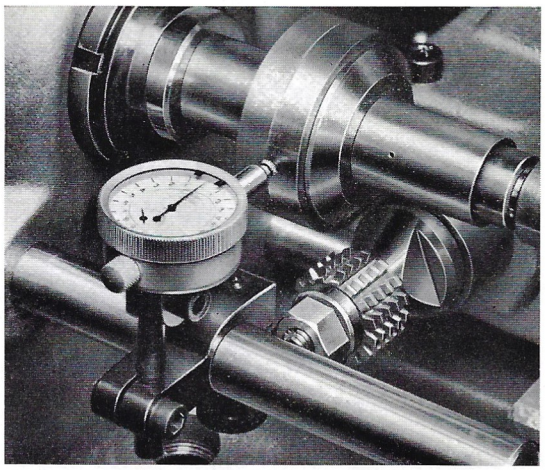

Steady rest with dial gauge for checking concentricity of blanks and work holders

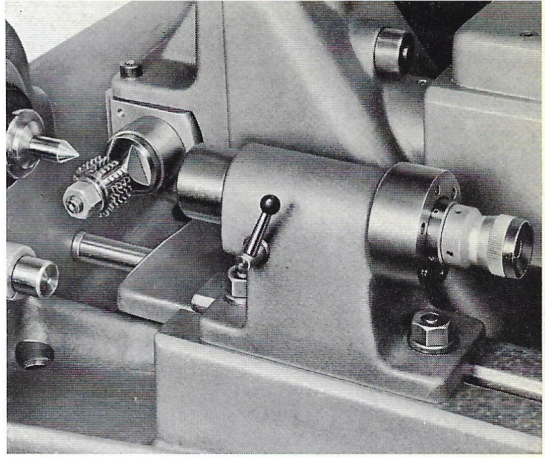

Hob centering attachment, includes a microscope

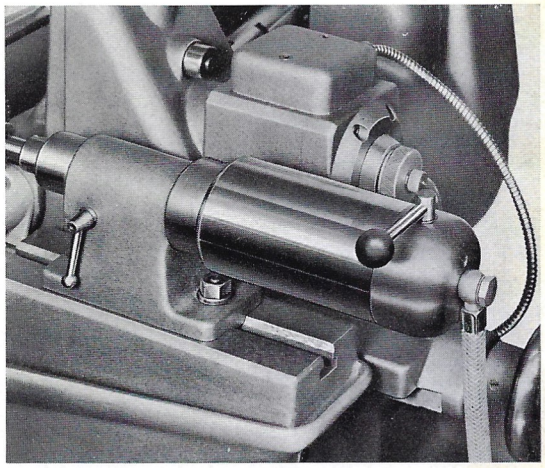

Pneumatic clamping device

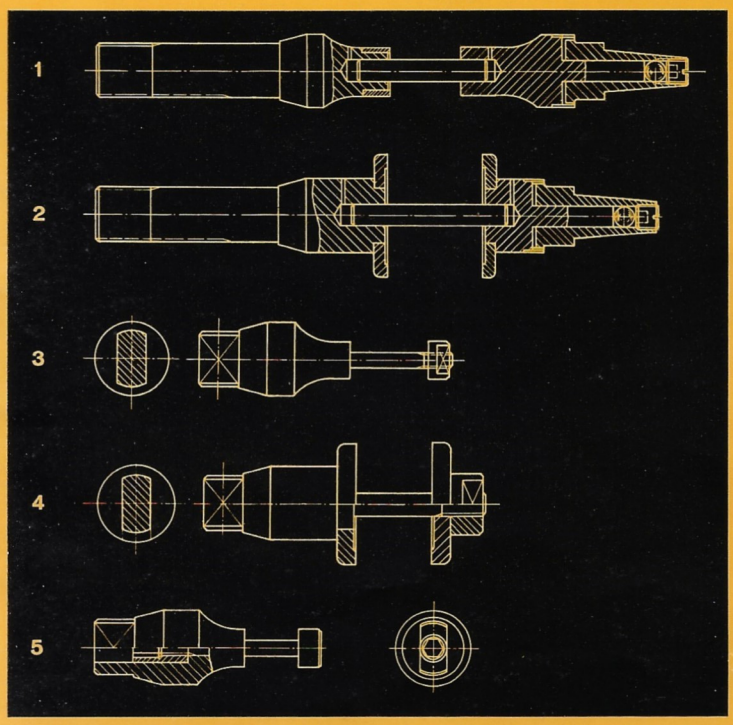

Lever draw-in attachment for collets

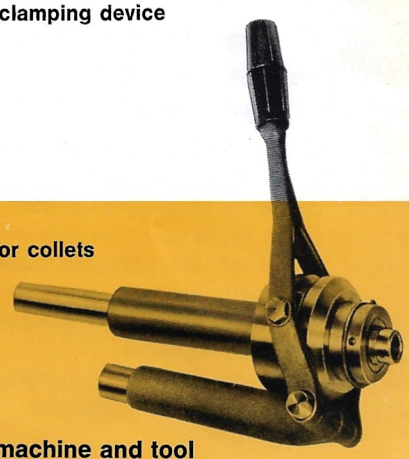

Absolute integration of machine and tool

Mikron® takes over your tooth cutting problems from A to Z and will give you the best possible solution for each particular case. The most suitable cutting and clamping tools are specified for each problem, these if necessary, being specially produced and supplied set up on the machine ready for production. Consequently Mikron machines and tools guarantee the practical optimum of:

- **Pitch accuracy**
- **Profile accuracy and**
- **Tooth surface quality**

Examples of work holders which can be used on machine 132-02

1 Holder for gearwheels with centre hole and small external diameter.
2 Holder for wheels with centre hole and external diameters of more than 1 1/8".
3 Loading mandrel with clamping nut.
4 Loading mandrel with clamping nut for gearwheels with large external diameters.
5 Loading mandrel with rotable clamping mandrel.
Ask for our new work-holding fixtures pamphlet.

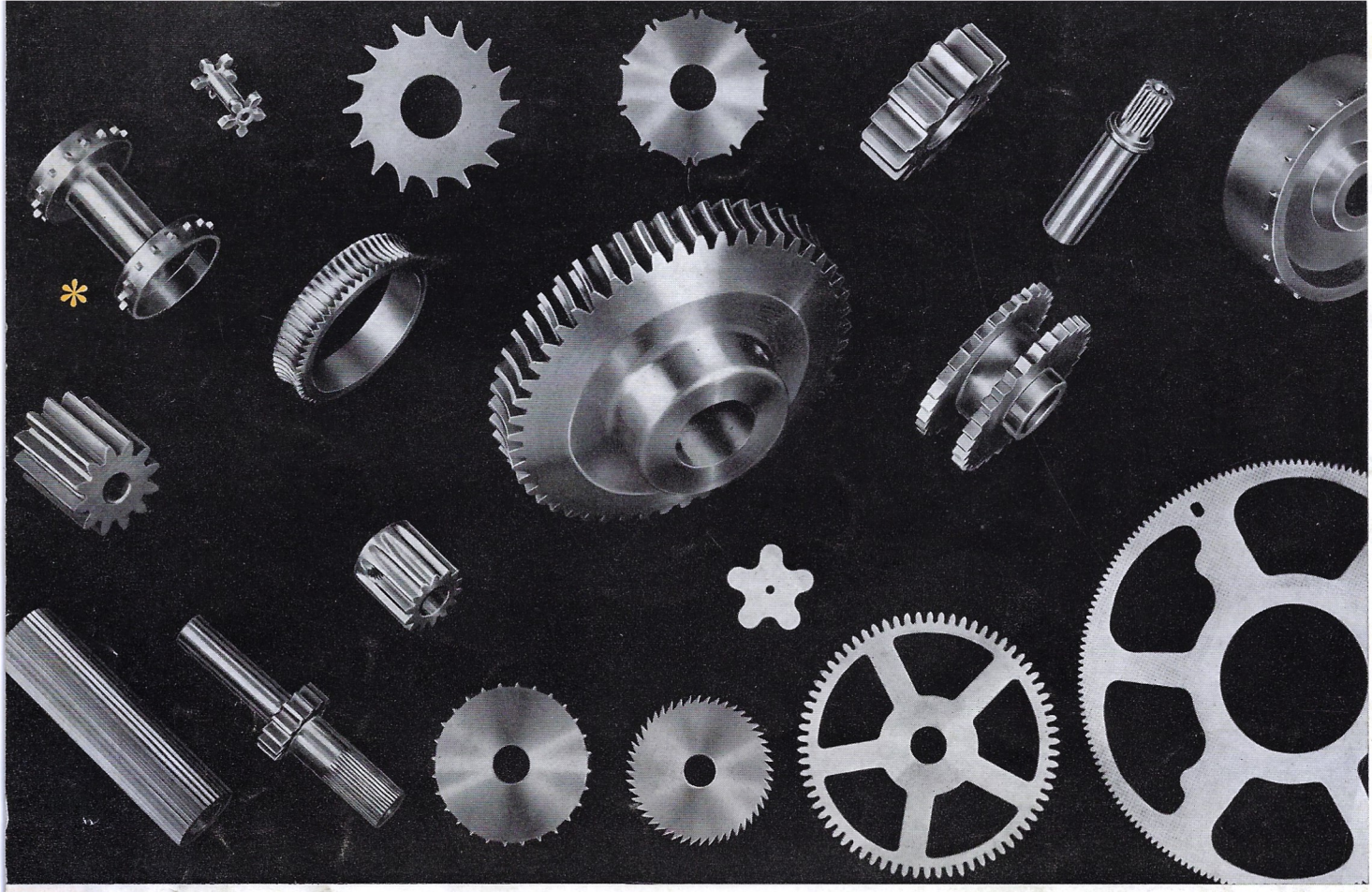

Some typical examples of tooth forms which can be produced on the hydraulic hobbing machine 132-02

All the examples of hobbing were undertaken using the hobbing method or the continuous indexing method. In the case of involute teeth it is possible for all numbers of teeth having the same pitch to be cut using a single hob. For epicycloidal and special teeth we supply hobs which are produced individually for each particular number of teeth and each tooth form. Tooth forms which cannot be hobbed are cut on our machines using the continuous indexing method with fly cutters.

* Special accessory for hobbing film reels, see item 3 (page 3) hobbing with intermediate rapid traverse.

Special execution

The 132–02 machine can be equipped, in return for extra costs, with a special hob cycle with intermediate rapid feed, for double plunge and convex hobbing. Please ask offers.

Production programme

Hobbing machines for spur and spiral wheels
Universal hobbing machines
Hobbing machines for long and short threads and for internal threads
Automatic hobbing machines for pinions
Hobbing machines for bevel gears
Precision hobs and fly cutters
Sharpening machines for hobs (automatic and manual operation)
Electrical discharge machining
Gear measuring instruments

Advice free of cost, world-wide consumer service

Our Engineering Advisory Service is available to you at all times and without any obligation on your part for all tooth cutting problems. There are Mikron representatives in nearly all countries.

MIKRON®

Mikron Machine Works Ltd. Biel/Switzerland
Alleestrasse 11 / Tel. 032 2 74 85 / Telex 3 43 27

Printed in Switzerland 666 1500