EISEN®
LIVE IN STYLE

SKU: EH-V224

24” Single Sink Bathroom Vanity Set

Vanity Overall: 24” W x 22” L x 35” H
Cabinet: 23.25” W x 21.75” L x 34” H
Sink: 17.12” W x 12” L x 7” D

TOP

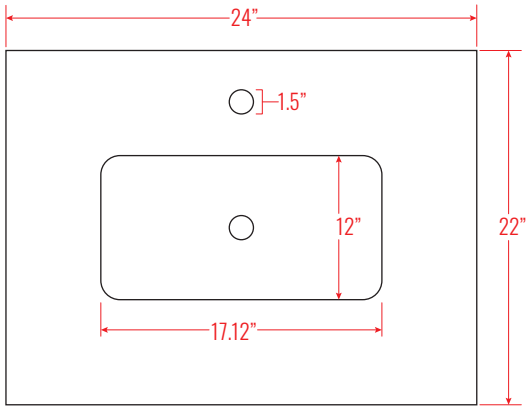

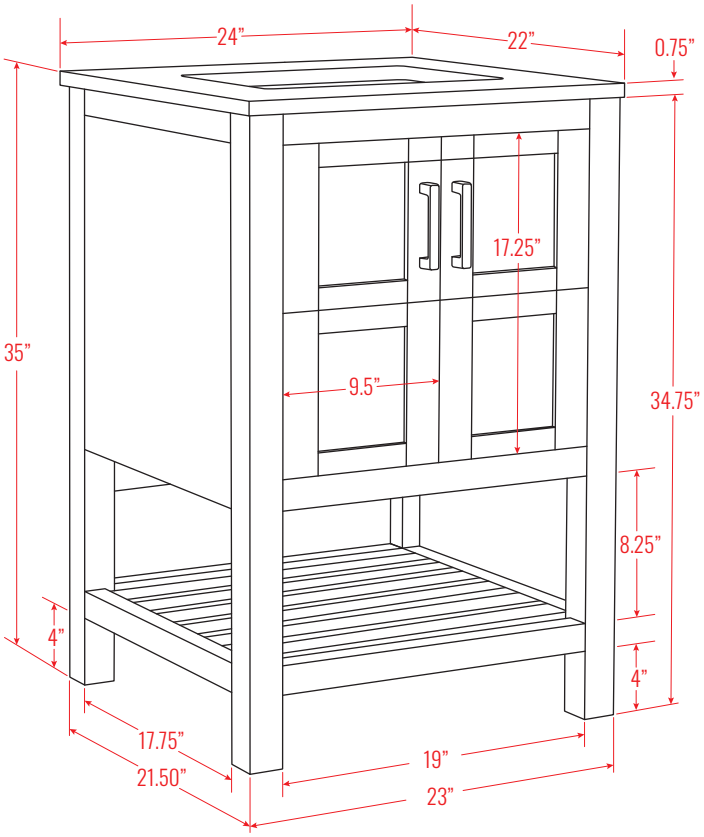

BACK

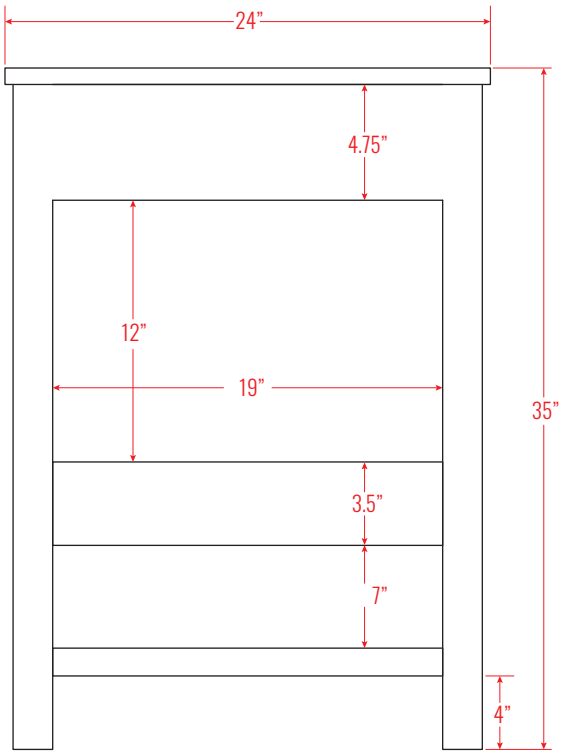

All dimensions and specifications are approximate and subject to change without notice.