DESKY

Desky Dual Spring Eco Monitor Arm
Specification Sheet

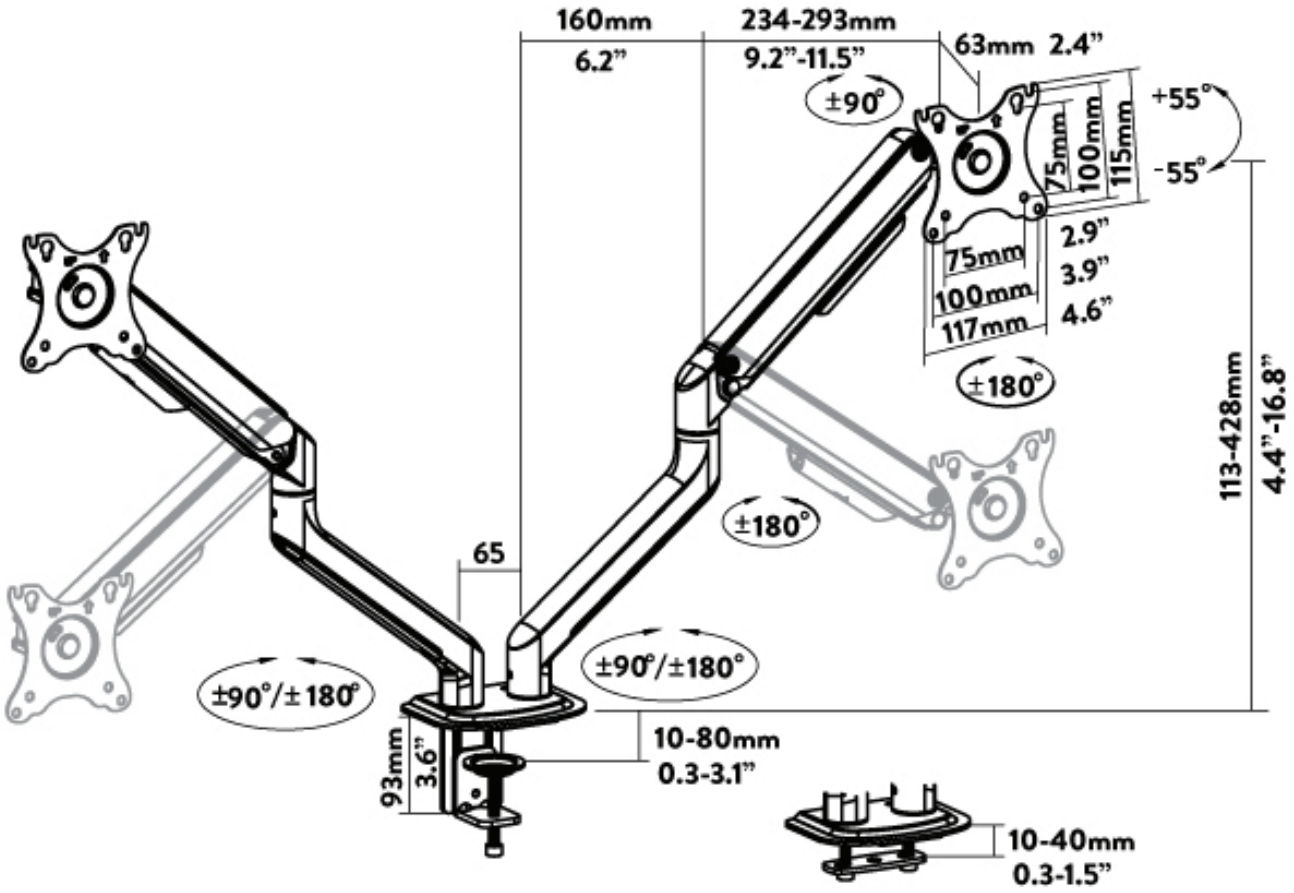

Specifications

Material	Steel, Plastic, Aluminium	**Weight Capacity**	2-9kg (4.4lbs~19.8lbs)
Surface Finish	Powder Coating	**Fit Screen Size**	17"-32"
Colour	White, Space Grey	**VESA Compatible**	100x100mm, 75x75mm
Dimensions	970x107x578mm (38.2"x4.2"x22.8")	**Installation**	Clamp or through desk