Power Kit Example

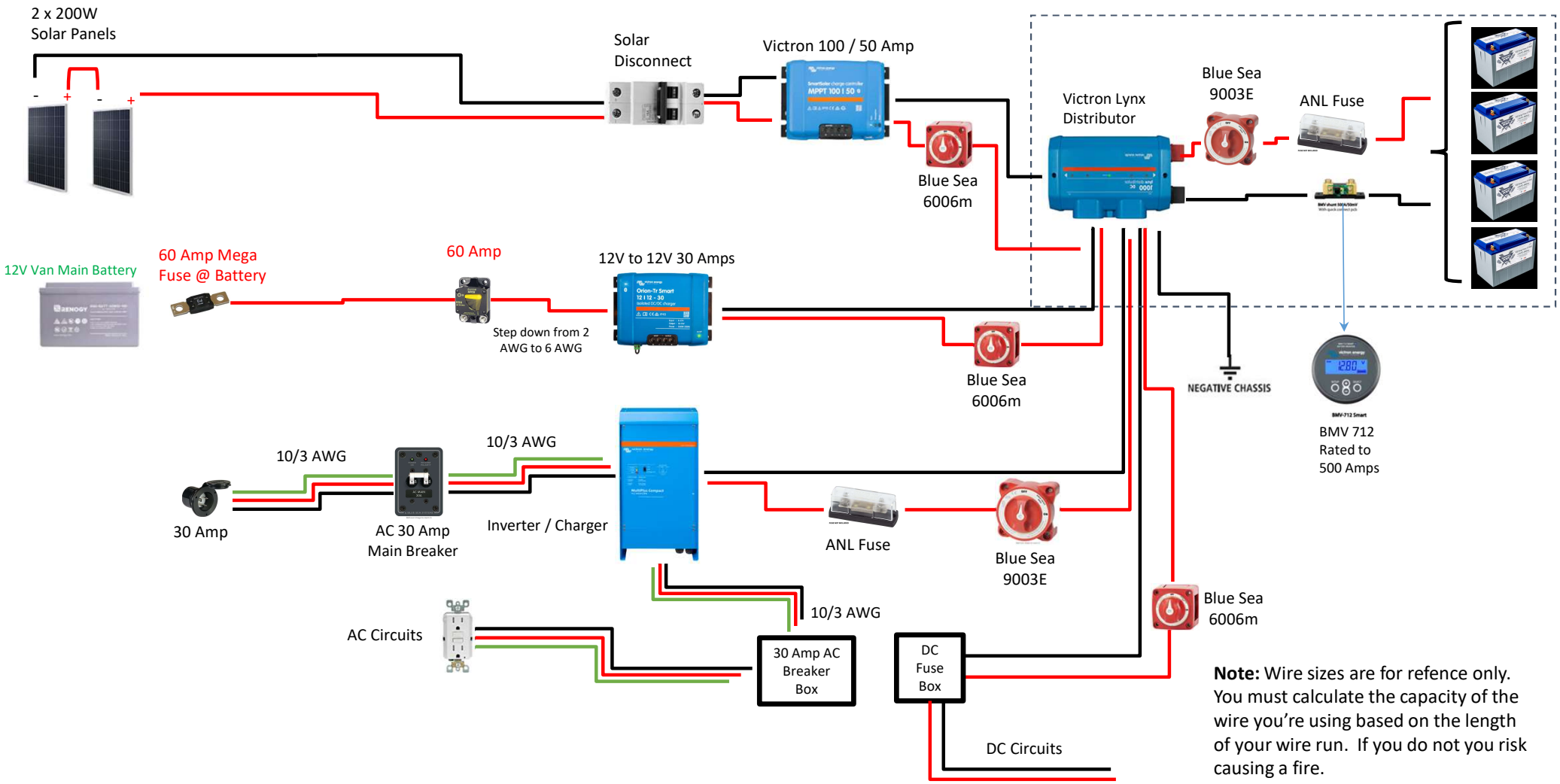

Note: Wire sizes are for refence only. You must calculate the capacity of the wire you're using based on the length of your wire run. If you do not you risk causing a fire.