FRANCONE
BESPOKE TAPS

Mixers

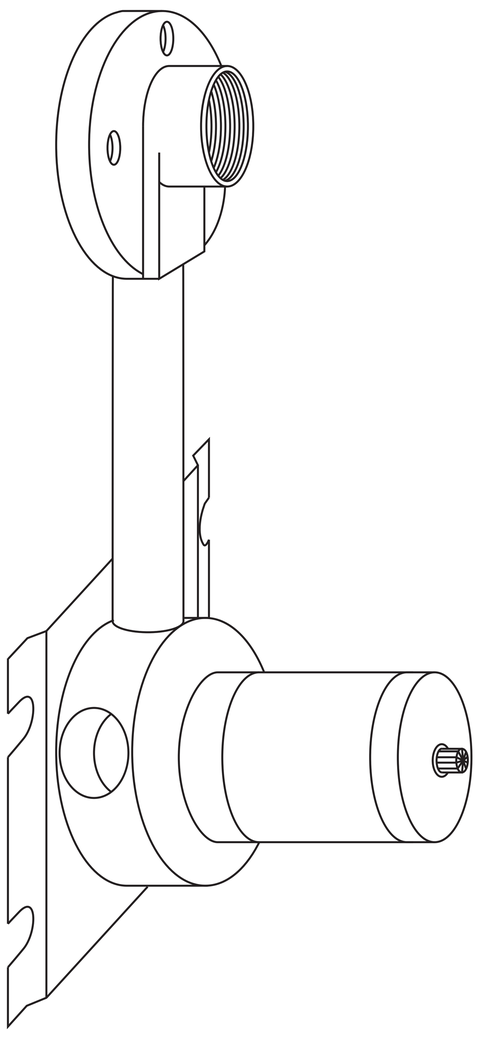

Guidelines

- Francone Bespoke Taps strives to continually improve so we reserve the right to change product specifications and design.
- The plumbing codes applicable in the respective countries must be observed. All water fittings should only be installed by a qualified plumbing engineer.
- Take extra care during installation not to damage the finish or fitting.
- To prevent damage to valves and cartridges, flush the pipes to remove debris before beginning the installation, and then turn off the water supply.
- For routine maintenance, keep products and connections accessible. We recommend the use of isolation and non-return valves when appropriate in all installations.
- Optimal water pressure 3 bar. Minimum water pressure 1 bar. Where water pressure exceeds 5 bar, we suggest pressure reducing valves are fitted. For optimum performance, hot and cold water pressure should be correctly balanced.
- It is important to note that the risk of scalding persists until the installer has appropriately calibrated and adjusted the temperature setting during the final trim installation. We urge the installer to exercise caution and precision in this regard to mitigate scalding risks.
- Limescale accumulation is unavoidable on all water fittings. In regions with hard water, we recommend installing an appropriate water treatment device.
- Examine all connections for leaks and verify that the products are functioning correctly. Keep them clean and protected until all work in the property is completed.

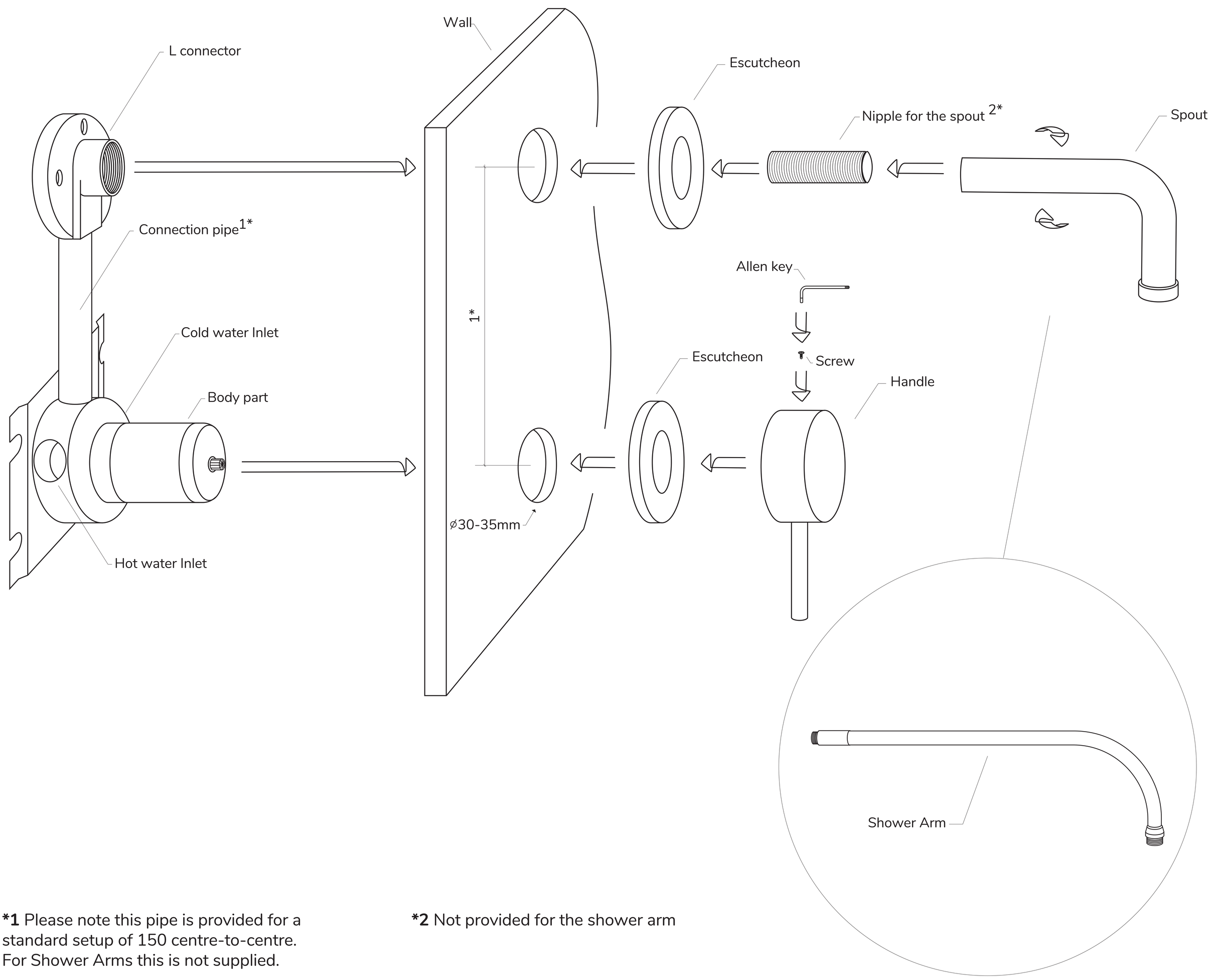

***1** Please note this pipe is provided for a standard setup of 150 centre-to-centre. For Shower Arms this is not supplied.

***2** Not provided for the shower arm