FRANCONE
BESPOKE TAPS

# Wall Mounted Pot Filler installation

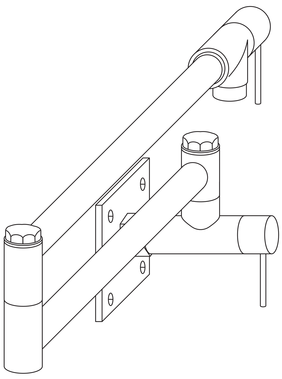

**Guidelines**

- Francone Bespoke Taps strives to continually improve so we reserve the right to change product specifications and design.
- The plumbing codes applicable in the respective countries must be observed. All water fittings should only be installed by a qualified plumbing engineer.
- Take extra care during installation not to damage the finish or fitting.
- To prevent damage to valves and cartridges, flush the pipes to remove debris before beginning the installation, and then turn off the water supply.
- For routine maintenance, keep products and connections accessible. We recommend the use of isolation and non-return valves when appropriate in all installations.
- Optimal water pressure 3 bar. Minimum water pressure 1 bar. Where water pressure exceeds 5 bar, we suggest pressure reducing valves are fitted. For optimum performance, hot and cold water pressure should be correctly balanced.
- It is important to note that the risk of scalding persists until the installer has appropriately calibrated and adjusted the temperature setting during the final trim installation. We urge the installer to exercise caution and precision in this regard to mitigate scalding risks.
- Limescale accumulation is unavoidable on all water fittings. In regions with hard water, we recommend installing an appropriate water treatment device.
- Examine all connections for leaks and verify that the products are functioning correctly. Keep them clean and protected until all work in the property is completed.

---

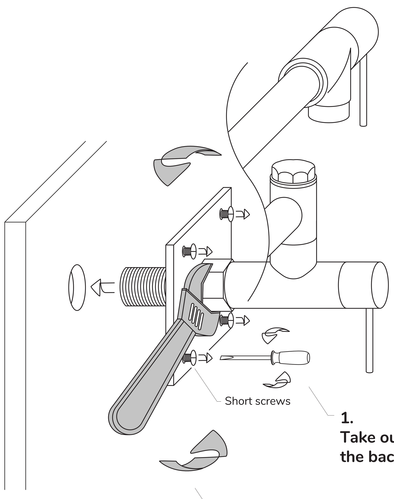


**1.**
**Take out the four short screws from the backplate.**

**2.**
**Secure the tap and backplate into the vertical position by using a wrench to screw them in place.**

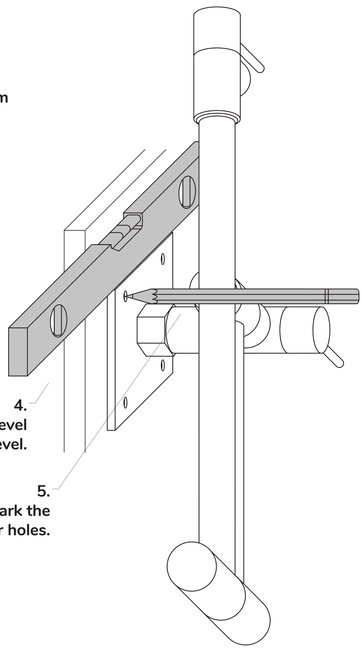

**3.**
**Turn the tap 90 degrees anti-clockwise.**

**4.**
**Ensure the backplate is level at the top using a spirit level.**

**5.**
**Use a pencil to mark the locations of the four holes.**

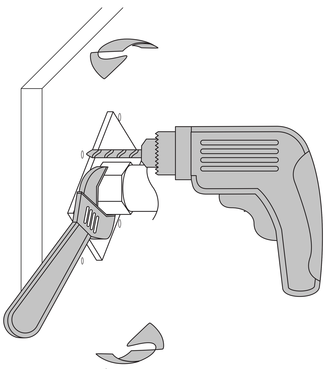

**7.**
**Drill four holes where you marked with the pencil and insert plastic wall plugs.**

**6.**
**Rotate the backplate clockwise by 45 degrees using the wrench to make the holes visible.**

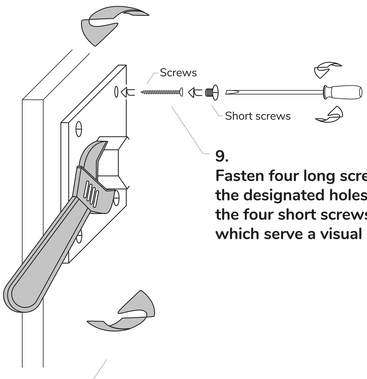


**9.**
**Fasten four long screws into the wall at the designated holes. Finally, reattach the four short screws removed in step 1, which serve a visual purpose only.**

**8.**
**Now the the tap, along with the backplate, can be rotated clockwise to reach the final position. This adjustment is performed using the wrench, rotating it completely, including the final 90-degree left turn at point 3.**