Funke Gruppe

HS®-Drainage Pipe System

High Strength adoptable Drainage and Sewer System DN/OD 110 to DN/OD 800

The HS®-Range of 110 to 800 mm:

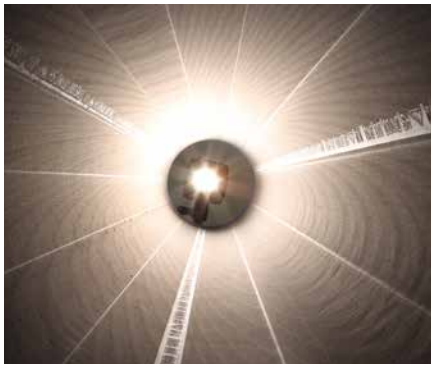

Inner pipe marking

This is unique: the HS®-Drainage Pipes are also marked on the inner wall continuously on the axis at an angle of 120°. The permanent engraving (embossment) enables important pipe-related data such as the manufacturer, nominal diameter, ring stiffness and the production date to be read even years later (available from DN 200).

Fitting markings

All fittings are clearly marked. The permanent markings include the standard, the area of use, the name of the manufacturer, the wall thickness, the nominal diameter, the material, the stiffness class and additional manufacturer data as needed.

The HS®-Drainage Pipe System provides the user with a complete system which has excellent technical properties and is available from DN/OD 110 to DN/OD 800. Not only do the pipes and fittings make this modern drainage pipe system what it is, but special additional components such as the VARIO coupler, the Demarcation and Control Chamber, a level invert lateral connection, laser & access opening and diverse bends and branches also contribute to the strong performance and diversity of use. The pipes are solid wall PVC-U pipes with an increased wall thickness in the colour brown. They are manufactured as plain-ended pipes with chamfered spigots in DN/OD 110 – 315 and as single socket pipes in sizes DN/OD 400 – 800. The pipes are available in lengths of 0.5 m, 1.5 m, 3 m and 5 m. The fittings with a secure FE®-Sealing Ring are able to withstand heavy loads and can be installed at depths of between 0.5 m and 6 m for traffic loads of max, HA 20. The measured ring stiffness amounts to ≥ 12 respectively 16 kN/m². All of the fittings (SDR 34) are manufactured so that they do not form any steps on the interior. The use of the double socketed fittings enables the drainage pipe system to be installed fast and flexibly.

12 kN/m²

DN/OD	Design	Wall thickness min. mm	available overall length m	Sealing system
110	plain ended	3.6	0.14/0.5/1.5/3.0	FE*
160	plain ended	5.5	0.18/0.5/1.5/3.0/5.0	FE*
200	plain ended	6.6	0.22/0.5/1.5/3.0/5.0	FE*
250	plain ended	8.2	0.5/1.5/3.0/5.0	FE*
315	plain ended	10.0	0.5/3.0	FE*
400	single socket	12.6	0.5/3.0	FE
500	single socket	16.5	0.5/3.0	FE
630	single socket	22.0	3.0	CI
710	single socket	22.5	3.0	CI
800	single socket	25.0	3.0	CI

16 kN/m²

DN/OD	Design	Wall thickness min. mm	available overall length m	Sealing system
160	plain ended	6.0	1.5/3.0	FE*
200	plain ended	7.5	1.5/3.0	FE*
250	plain ended	9.3	1.5/3.0	FE*
315	plain ended	11.7	1.5/3.0	FE*
400	single socket	14.9	1.5/3.0	FE
500	single socket	18.6	1.5/3.0	FE
630	single socket	22.0	1.5/3.0	CI

**Fitting sealing system (coupler)*

Pipes & Fittings and more

Couplers

The DN/OD 110 – 315 HS®-Drainage Pipes are manufactured as plain ended with chamfered spigots. The ridge construction of the double coupler provides an additional safety benefit: the click against the coupler ridge from the spigot end can be clearly heard and is a sign of the correct installation. The pipes and fittings are pressure tested to 2.5 bar so that they can also be used in high water table areas.

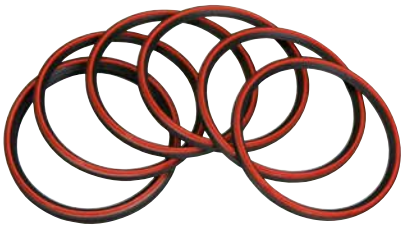

FE®-Ring Seal System

All of the components in the HS®-Drainage Pipe System are fitted with an oil-resistant red and black two-part seal. The FE®-Seal is firmly attached to the fitting so that it cannot be forgotten or forced out of place when the spigot end of the pipe is being inserted. From DN/OD 630 to DN/OD 800 pipes and fittings are euipped with a securely integrated CI®-Ring Seal System.

Demarcation and Control Chamber

- Small, telescopic
- Class B 125 or class D 400
- 600 mm radius

VARIO coupler

The HS®-VARIO coupler has an integrated, flexible ball socket. This allows connected pipes to pivot within a range of 0° – 11°. The fitting is available in nominal diameter of DN/OD 160 and DN/OD 200 – each of these being available as a socket/socket and a socket/spigot version. A sanded version is also available for installation in concrete structures.

Funke HS®-Drainage

Code-No.	DN/OD	Length [m]	Design	Wall thickness min. mm	Pack Quantity	Ring stiffness
HS-Pipes, brown, SN 12						
HSSR014100	110	0.14	plain ended	3.6	300	SN 12
HSSR0215	160	0.18	plain ended	5.5	100	SN 12
HSSR0220	200	0.22	plain ended	6.6	50	SN 12
HSSR0510	110	0.5	plain ended	3.6	108	SN 12
HSSR0515	160	0.5	plain ended	5.5	46	SN 12
HSSR0520	200	0.5	plain ended	6.6	30	SN 12
HSSR0525	250	0.5	plain ended	8.2	16	SN 12
HSSR050300	315	0.5	plain ended	10.0	8	SN 12
HSSR0540	400	0.5	with socket	12.6	3	SN 12
HSSR0550	500	0.5	with socket	16.5	2	SN 12
HSSR1510	110	1.5	plain ended	3.6	36	SN 12
HSSR1515	160	1.5	plain ended	5.5	48*	SN 12
HSSR1520	200	1.5	plain ended	6.6	30	SN 12
HSSR1525	250	1.5	plain ended	8.2	12	SN 12
HSSR150300SS	315	1.5	plain ended	10.0	6	SN 12
HSSR1540SS	400	1.5	plain ended	12.6	6	SN 12
HSSR1550SS	500	1.5	plain ended	16.5	4	SN 12
HSSR1570SS	710	1.5	plain ended	22.5	3	SN 12
HSSR1580SS	800	1.5	plain ended	25.0	3	SN 12
HSSR1540	400	1.5	with socket	12.6	6	SN 12
HSSR1550	500	1.5	with socket	16.5	4	SN 12
HSSR1570	710	1.5	with socket	22.5	3	SN 12
HSSR1580	800	1.5	with socket	25.0	3	SN 12
HSSR3010	110	3.0	plain ended	3.6	36	SN 12
HSSR3015	160	3.0	plain ended	5.5	48*	SN 12
HSSR3020	200	3.0	plain ended	6.6	30*	SN 12
HSSR3025	250	3.0	plain ended	8.2	12	SN 12
HSSR300300	315	3.0	plain ended	10.0	6	SN 12
HSSR3040	400	3.0	with socket	12.6	6	SN 12
HSSR3050	500	3.0	with socket	16.6	4*	SN 12
HSSR3060	630	3.0	with socket	22.0	3	SN 16
HSSR3070	710	3.0	with socket	22.5	3	SN 12
HSSR3080	800	3.0	with socket	25.0	3	SN 12
HSSR5010	110	5.0	plain ended	3.6	36	SN 12
HSSR5015	160	5.0	plain ended	5.5	48*	SN 12
HSSR5020	200	5.0	plain ended	6.6	30*	SN 12
HSSR5025	250	5.0	plain ended	8.2	12	SN 12

**half pallet upon request*

Pipe System

Code-No.	DN/OD	Length [m]	Design	Wall thickness min. mm	Pack Quantity	Ring stiffness
HS-Pipes, brown, SN 16						
HSSR161515SS	160	1.5	plain ended	6.0	48	SN 16
HSSR161520SS	200	1.5	plain ended	7.5	30	SN 16
HSSR161525SS	250	1.5	plain ended	9.3	12	SN 16
HSSR16150300SS	315	1.5	plain ended	11.7	6	SN 16
HSSR161540SS	400	1.5	plain ended	14.9	6	SN 16
HSSR161550SS	500	1.5	plain ended	18.6	4	SN 16
HSSR1560SS	630	1.5	plain ended	22.0	3	SN 16
HSSR161540	400	1.5	with socket	14.9	6	SN 16
HSSR161550	500	1.5	with socket	18.6	4	SN 16
HSSR1560	630	1.5	with socket	22.0	3	SN 16
HSSR163015	160	3.0	plain ended	6.0	48*	SN 16
HSSR163020	200	3.0	plain ended	7.5	30*	SN 16
HSSR163025	250	3.0	plain ended	9.9	12	SN 16
HSSR16300300	315	3.0	plain ended	11.7	6	SN 16
HSSR163040	400	3.0	with socket	14.9	6	SN 16
HSSR163050	500	3.0	with socket	18.6	4	SN 16
HSSR3060	630	3.0	with socket	22.0	3	SN 16
Lubricant						
KGGL500					1	
KGGL1000					1	

**half pallet upon request*

Lubricant Estimation

Demand of lubricant: The following values are determined by experimenting and represent reference values for the careful use of lubricant for pipes made out of PVC-U.

g = gram
n = number

DN	g/Socket	n (Sockets)	Lubricant Tube	Sockets/Tube	Joints/Tube
110 mm	2	2	1000 g	500	250
125 mm	3	2	1000 g	333	167
160 mm	4	2	1000 g	250	125
200 mm	5	2	1000 g	200	100
250 mm	6	2	1000 g	167	83
315 mm	15	2	1000 g	67	33
400 mm	25	1	1000 g	40	40
500 mm	35	1	1000 g	29	29
630 mm	40	1	1000 g	25	25
710 mm	60	1	1000 g	17	17
800 mm	75	1	1000 g	13	13

Funke HS®-Drainage

Code-No.	DN/OD		Design		Pack Quantity bundle/pack	SDR class
HS-Double Socket Couplers, SDR 34, brown						
HSSDM100K	110	–	with central stop		10/220	SDR 34
HSSDM150	160	–	with central stop		10/150	SDR 34
HSSDM200	200	–	with central stop		80	SDR 34
HSSDM250	250	–	with central stop		24	SDR 34
HSSDM300	315	–	with central stop		16	SDR 34
HS-Double Socket Repair Couplers, SDR 34, brown						
HSSU100K	110	–	without central stop		10/220	SDR 34
HSSU150K	160	–	without central stop		90	SDR 34
HSSU200K	200	–	without central stop		45	SDR 34
HSSU250	250	–	without central stop		24	SDR 34
HSSU300	315	–	without central stop		16	SDR 34
HSSU400	400	–	without central stop		8	SDR 34
HSSU500	500	–	without central stop		3	SDR 34
HSSU600	630	–	without central stop		1	SDR 34
HSSU700	710	–	without central stop		1	SDR 34
HSSU800	800	–	without central stop		1	SDR 34
HS-Bends, SDR 34, brown						
HSSB1510K	110	15°	2 sockets		10/190	SDR 34
HSSB1515K	160	15°	2 sockets		80	SDR 34
HSSB1520K	200	15°	2 sockets		45	SDR 34
HSSB1525K	250	15°	2 sockets		22	SDR 34
HSSB1530K	315	15°	2 sockets		12	SDR 34
HSSB1540	400	15°	1 socket		3	SDR 34
HSSB1550	500	15°	1 socket		1	SDR 34
HSSB1560	630	15°	1 socket		1	SDR 34
HSSB1570	710	15°	1 socket		1	SDR 34
HSSB1580	800	15°	1 socket		1	SDR 34
HSSB3010K	110	30°	2 sockets		10/190	SDR 34
HSSB3015K	160	30°	2 sockets		80	SDR 34
HSSB3020K	200	30°	2 sockets		42	SDR 34
HSSB3025K	250	30°	2 sockets		22	SDR 34
HSSB3030K	315	30°	2 sockets		12	SDR 34
HSSB3040	400	30°	1 socket		2	SDR 34
HSSB3050	500	30°	1 socket		1	SDR 34
HSSB3060	630	30°	1 socket		1	SDR 34
HSSB3070	710	30°	1 socket		1	SDR 34
HSSB3080	800	30°	1 socket		1	SDR 34

Pipe System







Code-No.	DN/OD		Design		Pack Quantity bundle/pack	SDR class
HS-Bends, SDR 34, brown						
HSSB4510K	110	45°	2 sockets		10/170	SDR 34
HSSB4515K	160	45°	2 sockets		65	SDR 34
HSSB4520K	200	45°	2 sockets		36	SDR 34
HSSB4525K	250	45°	2 sockets		19	SDR 34
HSSB4530K	315	45°	2 sockets		10	SDR 34
HSSB4540	400	45°	1 socket		2	SDR 34
HSSB4550	500	45°	1 socket		1	SDR 34
HSSB4560	630	45°	1 socket		1	SDR 34
HSSB4570	710	45°	1 socket		1	SDR 34
HSSB4580	800	45°	1 socket		1	SDR 34
HS-Swept Bend, SDR 34, brown						
HSSB8710K	110	87°	2 sockets		5/90	SDR 34
HS-Short Bends, SDR 34, brown						
HSSKB1510K	110	15°	1 socket		10/210	SDR 34
HSSKB1515K	160	15°	1 socket		90	SDR 34
HSSKB3010K	110	30°	1 socket		10/190	SDR 34
HSSKB3015K	160	30°	1 socket		70	SDR 34
HSSKB4510K	110	45°	1 socket		10/190	SDR 34
HSSKB4515K	160	45°	1 socket		70	SDR 34
HS-Junctions, SDR 34, triple socket, brown						
HSSA101045K	110/110	45°	3 sockets		5/70	SDR 34
HSSA1510K	160/110	45°	3 sockets		30	SDR 34
HSSA1515K	160/160	45°	3 sockets		30	SDR 34
HSSA2015K	200/160	45°	3 sockets		16	SDR 34
HSSA2020K	200/200	45°	3 sockets		15	SDR 34
HSSA2515K	250/160	45°	3 sockets		8	SDR 34
HSSA2520K	250/200	45°	3 sockets		8	SDR 34
HSSA2525	250/250	45°	3 sockets		5	SDR 34
HSSA3015K	315/160	45°	3 sockets		6	SDR 34
HSSA3020K	315/200	45°	3 sockets		6	SDR 34
HSSA3025K	315/250	45°	3 sockets		2	SDR 34
HS-Junctions, SDR 34, double socket, brown						
HSSA101045MMK	110/110	45°	2 sockets		5/70	SDR 34
HSSA4015	400/160	45°	2 sockets		3	SDR 34
HSSA4020	400/200	45°	2 sockets		3	SDR 34
HSSA4025	400/250	45°	2 sockets		1	SDR 34
HSSA4030	400/315	45°	2 sockets		1	SDR 34
HSSA5015	500/160	45°	2 sockets		4	SDR 34
HSSA5020	500/200	45°	2 sockets		4	SDR 34
HSSA5025	500/250	45°	2 sockets		1	SDR 34
HSSA5030	500/315	45°	2 sockets		1	SDR 34
HSSA5040	500/400	45°	2 sockets		1	SDR 34
HSSA6015	630/160	45°	2 sockets		1	SDR 34
HSSA6020	630/200	45°	2 sockets		1	SDR 34

Funke HS®-Drainage

Code-No.	DN/OD		Design		Pack Quantity	SDR class
HSSA6025	630/250	45°	2 sockets		1	SDR 34
HSSA7015	710/160	45°	2 sockets		1	SDR 34
HSSA7020	710/200	45°	2 sockets		1	SDR 34
HSSA7025	710/250	45°	2 sockets		1	SDR 34
HSSA8015	800/160	45°	2 sockets		1	SDR 34
HSSA8020	800/200	45°	2 sockets		1	SDR 34
HSSA8025	800/250	45°	2 sockets		1	SDR 34
HSSA8030	800/315	45°	2 sockets		1	SDR 34
HSSA8040	800/400	45°	2 sockets		1	SDR 34
HS-Junctions, 87°, SDR 34, brown						
HSST303087	315/315	87°	3 sockets		4	SDR 34
HSST404087	400/400	87°	2 sockets		1	SDR 34
HSST505087	500/500	87°	2 sockets		1	SDR 34
HS-Level Invert Reducer, SDR 34, brown						
HSSU1510K	160/110				10/140	SDR 34
HSSU2015K	200/160				90	SDR 34
HSSU2520	250/200				48	SDR 34
HSSU3025	315/250				24	SDR 34
HSSU4030	400/315				1	SDR 34
HSSU5040	500/400				1	SDR 34
HSSU6050	630/500				1	SDR 34
HSSU7060	710/630				1	SDR 34
HSSU8070	800/710				1	SDR 34
HS-Caps, SDR 34, brown						
HSSK2500	250				126	SDR 34
HSSK3000	315				62	SDR 34
HS-Socket Plugs, SDR 34, brown						
HSSM100K	110				600	SDR 34
HSSM150K	160				192	SDR 34
HSSM200K	200				220	SDR 34
HSSM250K	250				78	SDR 34
HSSM300K	315				42	SDR 34
HSSM400K	400				26	SDR 34
HSSM500K	500				1	SDR 34
HSSM600K	630				1	SDR 34
HS-VARIO Socket, SDR 34, brown						
HSSVMM160	160		double socket		72	SDR 34
HSSVMM200	200		double socket		45	SDR 34
HSSVMS160	160		single socket		56	SDR 34
HSSVMS200	200		single socket		30	SDR 34

Pipe System

Code-No.	DN/OD		Design		Pack Quantity	SDR class
HS-VARIO Junctions Equal Base (level invert), SDR 34, 90°, brown						
HSSVAS3015	315/160	90°			4	SDR 34
HSSVAS3020	315/200	90°			4	SDR 34
HSSVAS4015	400/160	90°			2	SDR 34
HSSVAS4020	400/200	90°			2	SDR 34
HSSVAS5015	500/160	90°			4	SDR 34
HSSVAS5020	500/200	90°			4	SDR 34
HSSVAS6015	630/160	90°			1	SDR 34
HSSVAS6020	630/200	90°			1	SDR 34
HS-VARIO Junctions, SDR 34, 90° (adjustable 0°-11°), brown						
HSSVA1515K	160/160	90°			1	SDR 34
HSSVA2015K	200/160	90°			1	SDR 34
HSSVA2515K	250/160	90°			1	SDR 34
HSSVA3015K	300/160	90°			1	SDR 34
HSSVA4015K	400/160	90°			1	SDR 34
HSSVA5015K	500/160	90°			1	SDR 34
HS-Clay Adaptor						
HSSUM100K	110		single socket		350	SDR34
HSSUM150K	160		single socket		160	SDR34
HS-S-VARIO Chamber Socket, SDR34, brown						
HSSVSM160	160		brown, sanded		92	SDR 34
HSSVSM200	200		brown, sanded		60	SDR 34
HS-Chamber Sockets, sanded SDR34, brown						
HSSSM100	HS-Chamber Socket DN/OD 110 mm, length 150 mm				loose	
HSSSM150K	HS-Chamber Socket DN/OD 160 mm, length 150 mm				50	
HSSSM200K	HS-Chamber Socket DN/OD 200 mm, length 150 mm				40	
HSSSM250K	HS-Chamber Socket DN/OD 200 mm, length 150 mm				40	
HSSSM300K	HS-Chamber Socket DN/OD 315 mm, length 150 mm				24	
HSSSM400K	HS-Chamber Socket DN/OD 400 mm, length 150 mm				12	
HSSSM500K	HS-Chamber Socket DN/OD 500 mm, length 150 mm				8	
HSSSM600	HS-Chamber Socket DN/OD 630 mm, length 150 mm				3	
HSSSM700	HS-Chamber Socket DN/OD 710 mm, length 150 mm				2	
HSSSM800	HS-Chamber Socket DN/OD 800 mm, length 150 mm				2	
HS-Accessories	**Description**					
HSROHR SCHNEIDER	HS-Cutting and Chamfering Machine UK				1	
HSTRENNSCHEIBE	HS-Cutting and Chamfer Wheel				1	
HSAKSCHLÜSSEL	Installation Wrench for HS-Cast Iron Cover Class D				1	
HSANFASSCHEIBE	HS-Cutting Wheel, loose, for HS-Pipe Cutting				1	
HSGABAB200	HS-Cast Iron Cover Class A/B				1	
HSGABD200SET	HS-Cast Iron Cover Class D Set with Marker Cap				1	
HS-Access Pipes						
HSSRE250	250	0.61	double socket		1	SDR 34
HSSRE300	315	1.0	single socket		1	SDR 34
HSSRE400	400	1.0	single socket		1	SDR 34
HSSRE500	500	1.0	single socket		1	SDR 34

Funke HS®-Drainage

HS®-Demarcation Chambers

Set Class B 125

Set Class D 400

Code-No.	Description		Pack Quantity
HS-Demarcation / Control Chamber Class B DN 160*			
HSSAK2015ABG-SET	HS-Demarcation/Control Chamber Set Class B	DN/OD 160/160 - 200, use with DN/OD 200 mm Riser Pipe	1
HSSAK2015ABL-SET	HS-Demarcation/ Control Chamber Set Class B	DN/OD 160/160/160 45° left - 200, use with DN/OD 200 mm Riser Pipe	1
HSSA-K2015ABRSET	HS-Demarcation/Control Chamber Set Class B	DN/OD 160/160/160 45° right - 200, use with DN/OD 200 mm Riser Pipe	1
HS-Demarcation / Control Chamber Class B DN 200*			
HSSAK2020ABG-SET	HS-Demarcation/Control Chamber Set Class B	DN/OD 200/200 - 200, for DN/OD 200 mm Riser Pipe	1
HSSAK2020ABL-SET	HS-Demarcation/Control Chamber Set Class B	DN/OD 200/200/200 45° left - 200, use with DN/OD 200 mm Riser Pipe	1
HSSA-K2020ABRSET	HS-Demarcation/Control Chamber Set Class B	DN/OD 200/200/200 45°right - 200, use with DN/OD 200 mm Riser Pipe	1
HS-Demarcation / Control Chamber Class B DN 250*			
HSSAK2520ABG-SET	HS-Demarcation/Control Chamber Set Class B	DN/OD 250, straight for 200 mm Riser Pipe	1
HS-Demarcation / Control Chamber Class D DN 160*			
HSSAK2015DG-SET	HS-Demarcation/Control Chamber Set Class D	DN/OD 160/160 - 200, for DN/OD 200 mm Riser Pipe	1
HSSAK2015DLSET	HS-Demarcation/Control Chamber Set Class D	DN/OD 160/160/160 45° left - 200, use with DN/OD 200 mm Riser Pipe	1
HSSAK2015DRSET	HS-Demarcation/Control Chamber Set Class D	DN/OD 160/160/160 45° right - 200, use with DN/OD 200 mm Riser Pipe	1
HS-Demarcation / Control Chamber Class D DN 200*			
HSSAK2020DG-SET	HS-Demarcation/Control Chamber Set Class D	DN/OD 200/200 - 200, use with DN/OD 200 mm Riser Pipe	1
HSSAK2020DLSET	HS-Demarcation/Control Chamber Set Class D	DN/OD 200/200/200 45° left - 200, use with DN/OD 200 mm Riser Pipe	1
HSSAK2020DRSET	HS-Demarcation/Control Chamber Set Class D	DN/OD 200/200/200 45° right - 200, use with DN/OD 200 mm Riser Pipe	1
HS-Demarcation / Control Chamber Class D DN 250*			
HSSAK2520DG-SET	HS-Demarcation/ Control Chamber Set Class D	DN/OD 250, straight for 200 mm Riser Pipe	1
HS-Junction K90, SDR 34, brown			
HSSAKA902015G	HS-Junction K90	DN/OD 160/160 - straight, 200 90°	20
HSSAKA902015L	HS-Junction K90	DN/OD 160/160/160 45° left - 200 90°	15
HSSAKA902015R	HS-Junction K90	DN/OD 160/160/160 45° right - 200 90°	15
HSSAKA902020G	HS-Junction K90	DN/OD 200/200 - straight, 200 90°	14
HSSAKA902020L	HS-Junction K90	DN/OD 200/200/200 45° left - 200 90°	10
HSSAKA902020R	HS-Junction K90	DN/OD 200/200/200 45° right - 200 90°	10
HSSAKA902030G	HS-Junction K90	DN/OD 315/315 - straight, 200 90°	1
HSSAKA902040G	HS-Junction K90	DN/OD 400/400 - straight, 200 90°	1
HSSAKA902050G	HS-Junction K90	DN/OD 500/500 - straight, 200 90°	1
HSSAKA902520G	HS-Junction K90	DN/OD 250/250 - straight, 200 90°	1

**For Riser Pipe use HS-Pipe DN 200 12 kN/m²*

Pipe System

Code-No.	Description		Pack Quantity
HS-Chambers DN 800			
25181600201	HS-Control Chamber Channel	waste water open, rain water closed DN/OD 800	1
25180000121	HS-Receptor Chamber	in- and outlet DN/OD 250	1
25180000131	HS-Flow Control Chamber DN/OD 800	incl. Inlet DN/OD 200	1
25180000141	HS-Pressure Reduction Chamber DN/OD 800		1
25180000151	HS-Energy Conversion Chamber DN/OD 800		1
25180000171	HS-Pump Chamber DN/OD 800		1
25180000192	HS-Receptor Chamber VA	DN/OD 800, incl.stainless steel screen	1
25980015001	Chamber Extension DN/OD 800	length 1,50 m, incl. Socket	1
25181600101	HS-Control Chamber Type 1	DN/OD 800/160, straight	1
25181600111	HS-Control Chamber Type 1	DN/OD 800/160, RSL (right, straight, left) 45°	1
25182000101	HS-Control Chamber Type 1	DN/OD 800/200, straight	1
25182000111	HS-Control Chamber Type 1	DN/OD 800/200, RSL (right, straight, left) 45°	1
SO	HS-Control Chamber Type 1	DN/OD 800/200, RSL (right, straight, left) 90°	1
25182500101	HS-Control Chamber Type 1	DN/OD 800/250, straight	1
25182500211	HS-Control Chamber Type 1	DN/OD 800/250, bending up to 30°	1
25182500221	HS-Control Chamber Type 1	DN/OD 800/250, with lateral inlet left or right	1
25183000101	HS-Control Chamber Type 1	DN/OD 800/315, straight	1
25183000211	HS-Control Chamber Type 1	DN/OD 800/315, bending up to 30°	1
25183000221	HS-Control Chamber Type 1	DN/OD 800/315, with lateral inlet left or right	1
25184000101	HS-Control Chamber Type 1	DN/OD 800/400, straight	1
25184000211	HS-Control Chamber Type 1	DN/OD 800/400, bending up to 30°	1
25184000221	HS-Control Chamber Type 1	DN/OD 800/400, with lateral inlet left or right	1
25185000101	HS-Control Chamber Type 1	DN/OD 800/500, straight	1

**Riser Pipe has to be ordered seperately*

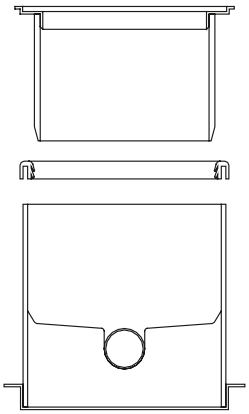

Telescopic Pipe
0.3 m / 0.5 m / 0.8 m

Telescopic Seal

Base Type 1

Funke HS®-Drainage

HS®-Chambers DN 800

Code-No.	Description		Pack Quantity
25281600101	HS-Control Chamber Base for Type 2	DN/OD 800/160, straight	1
25281600111	HS-Control Chamber Base for Type 2	DN/OD 800/160, RSL (right, straight, left) 45°	1
25282000101	HS-Control Chamber Base for Type 2	DN/OD 800/200, straight	1
25282000111	HS-Control Chamber Base for Type 2	DN/OD 800/200, RSL (right, straight, left) 45°	1
25282000231	HS-Control Chamber Base for Type 2	DN/OD 800/200, RSL (right, straight, left) 90°	1
25282500101	HS-Control Chamber Base for Type 2	DN/OD 800/250, straight	1
25282500211	HS-Control Chamber Base for Type 2	DN/OD 800/250, bending up to 30°	1
25282500221	HS-Control Chamber Base for Type 2	DN/OD 800/250, with lateral inlet left or right	1
25283000101	HS-Control Chamber Base for Type 2	DN/OD 800/315, straight	1
25283000211	HS-Control Chamber Base for Type 2	DN/OD 800/315, bending up to 30°	1
25283000221	HS-Control Chamber Base for Type 2	DN/OD 800/315, with lateral inlet left or right	1
25284000101	HS-Control Chamber Base for Type 2	DN/OD 800/400, straight	1
2518400211	HS-Control Chamber Base for Type 2	DN/OD 800/400, bending up to 30°	1
25184000221	HS-Control Chamber Base for Type 2	DN/OD 800/400, with lateral inlet left or right	1
25285000101	HS-Control Chamber Base for Type 2	DN/OD 800/500, straight	1
25380008001	Riser Pipe for Telescopic Pipe 50 cm	TYPIIDN/OD 800, 0.8 m	1
25380010001	Riser Pipe for Telescopic Pipe 50 cm	TYPIIDN/OD 800, 1.0 m	1
25380012001	Riser Pipe for Telescopic Pipe 50 cm	TYPIIDN/OD 800, 1.2 m	1
25380015001	Riser Pipe for Telescopic Pipe 50 cm	TYPIIDN/OD 800, 1.5 m	1

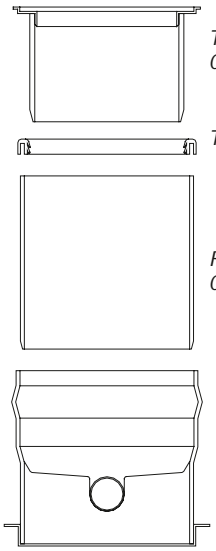

Telescopic Pipe
0.3 m / 0.5 m / 0.8 m

Telescopic Seal

Riser Pipe
0.8 m / 1.0 m / 1.2 m /1.5 m

Base Type 2

Pipe System

Code-No.	Description		Pack Quantity
Accessoires			
25470003003	Telescopic Pipe DN/OD 710	0.30 m	1
25470005003	Telescopic Pipe DN/OD 710	0.50 m	1
25470008003	Telescopic Pipe DN/OD 710	0.80 m	1
25580000004	Telescopic Seal DN/OD 800		1
25600000000	*Load Bearing Ring DN/OD 800/1200 mm	height 150 mm made of concrete	1
	Use with Class D applications		
Funke Chamber 1000			
SO	Bespoke design, contact Funke for design options and individual prices		

More chamber options available upon request

Funke Chamber DN 400

Funke Chamber DN 630

Funke DN 1000 Plastic Chamber

Fitting Range

1

HS®-Bend
DN/OD 110-315

2

HS®-Branch 45°
DN/OD 110-250

HS®-Branch 45°
DN/OD 110-630

HS®-Repair Coupler
DN/OD 110-800

HS®-Reducer
DN/OD 110-800

HS®-Coupler
DN/OD 110-315

HS®-VARIO Socket Plug
DN/OD 160

3

Connex Junction

HS®-Demarcation Chamber

4

Fittings

The HS®-Pipe System is equipped with a large number of fittings for the most diverse areas of application. They are wall-reinforced, like the other components. In this way pipes and fittings sustain high loadings and are suitable for coverings of 0.5 – 6 m for live loads up to SLW 60, HA 20 Loading, HA 20-44. The measured annular rigidity is ≥ 12 kN/m². The root proof and root impermeable pipe connections are impact-resistant and can be fast and easily installed. All fittings in the nominal diameters DN/OD 110 – 250 are constructed so that no recesses are formed inside. By omission of shaped sockets the laying of HS®-Pipes becomes faster and more flexible.

Funke

HS®-Short Radius Bend DN/OD 160

HS®-Socket Plug DN/OD 110-630

HS®-Swept Bend DN/OD 110

HS®-Base K90 DN/OD 160/200

HS®-Junction Base K90
with lateral inlet 45°

HS®-Inspection Chamber Base DN/OD 250

The HS®-Pipe System has a broad range of fittings, such as a HS®-Access Pipe, HS®-Bends, HS®-Adaptors or HS®-VARIO Socket, which makes the joints flexible. HS®-VARIO Socket is a fitting which has received several awards and is a useful supplement to the HS®-Double Coupler. It has an adjustable socket which enables the attached pipe joints to be pivotable in the range of 0° to 11°. The same applies to the CONNEX junction, which also has an integrated socket and can be perfectly combined with the HS®-Pipe system. With these flexible components the house connections or the lateral drain can be incorporated into the main sewer fast, easily and economically.

HS®-VARIO Socket DN/OD 160/200

HS®-VARIO Socket DN/OD 160/200

HS®-Demarcation Chamber

Set Class B 125

For Riser Pipe use DN/OD 200 HS®-Pipe or order separately.

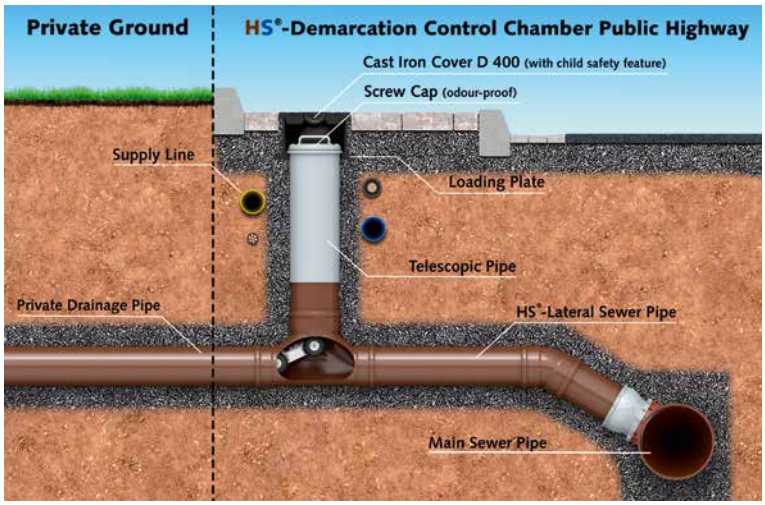

**600 mm radius to allow entry of maintenance equipment*

HS®-Demarcation Chamber

The HS®-Demarcation Chamber refers to the EN 13598-1 standard. Reason enough, therefore, to rely on Funke's HS®-Demarcation Chamber in the adoptable developments. The system allows fast and simple access to the drainage pipe work in public and private areas without having to access the property, and offers the possibility to perform inspection, jetting and leak testing. The variants of the inspection chamber are provided in user friendly and installation friendly sets. The cast iron cover is available in load classes B 125 and D 400.

Set Class D 400

For Riser Pipe use DN/OD 200 HS®-Pipe or order separately.

HS®-Pipe Cutting and Chamfering Machine

Safe and economical

With the HS®-Pipe Cutting and Chamfering Machine, Drainage, Sewer, HS® or CONNEX pipes made of PVC-U in a nominal diameter range of DN/OD 110 to DN/OD 315 with a maximum wall thickness of 15 mm can be cut to length and chamfered in one operation. It consists of an angle grinder that is attached to a galvanised framework. The tool has a nominal power of 1400 watts and a 110 volt connection, and is designed for cutting discs with a 125 mm diameter.

- **Cutting and chamfering in one operation**
- **For pipes DN/OD 110 to DN/OD 315**
- **For construction lengths of 0.18 to 5 m**
- **Nominal power 1400 watts**
- **Total weight about 25 kg**
- **Meets the industrial safety requirements**

A cutting disc custom-made to cut pipes ensures a clean cut. Extendable roll carriages or auxiliary stands form a secure support for pipes in construction lengths of 0.18 to 5 m. Because of the low weight of only about 25 kg, the pipe Cutting and Chamfering Machine can be easily handled at the construction site. There is enough space in a car for this compact Machine – the dimensions are 115 x 50 x 55 cm. In impassable or wet areas it can be set on a pallet to improve stability. In addition, a comfortable working height is achieved.

Cutting to length and simultaneous chamfering of the pipe

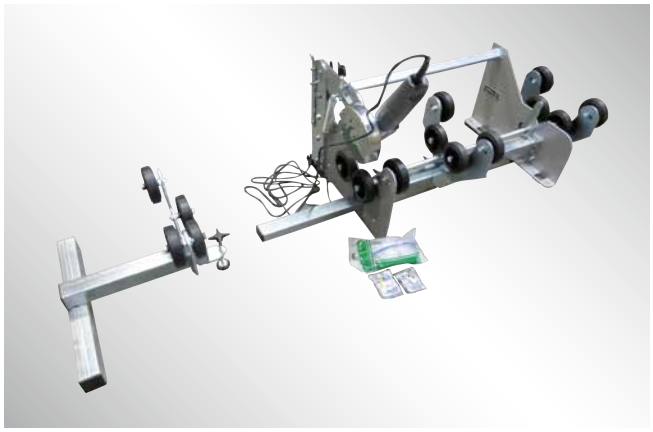

HS®-Pipe Cutting and Chamfering Machine

Pipe chamfering

Transport, Storage and of Funke HS®-Pipes

For HS®-Pipes DN/OD 110 – DN/OD 800

For the installation of HS®-Pipes, the European EN 1610 installation standard as well as the DWA- A 139 worksheet apply. The most important points to note for installation are summarised here.

Shipment

All of the parts shipped as part of the HS®-Sewer Pipe System need to be checked upon receipt. Ensure that the parts are adequately labelled and that they match requirements. Immediately preceding installation, check all the parts once more for damage.

Loading and unloading

The loading and unloading of HS®-Pipes and Fittings needs to be performed using suitable transport equipment (e.g., forklift). The loading and unloading of loose HS®-Pipes and Fittings needs to be performed manually.

Storage

Make sure to store HS®-Pipes and Fittings in a way that avoids soiling and damage. This is especially important for sleeves featuring fixed seals and pipe spigot ends. Store all piping on a level surface. Protect all parts against direct sunlight exposure, e.g., by covering them with a light-coloured tarpaulin. In doing so, ensure there is no possibility of heat build-up. In addition, ensure the stack of pipes is secured sufficiently to prevent any damage in case pipes tumble; similarly, avoid excessive stacking heights. When stacking loose pipes, never exceed the maximum stacking height of 1.2 m – this applies regardless

Installation Recommendations

of the pipes' nominal diameter. Never store stacks of pipes in proximity to open trenches. Where exposed to the cold, store the pipes at a slight elevation to avoid them freezing to the ground.

Trench design
Ensure the trench's stability through constructive measures as needed, such as retaining walls, landfill, etc. DIN 4124 applies.

The trench width needs to accommodate the static engineering requirements. According to EN 1610 Section 6.3, the minimum trench width is to be specified in reference to the pipe's nominal diameter, the trench wall design, and the trench depth. The trench bottom should accommodate both the required slope and the pipe shape. In the event that the ground is not naturally suited to bear the given weight, dig a deeper trench bottom and fill in with a compactable support material. As a rule, keep all trenches free of water during excavation and installation.

Lowering piping into trench
In order to prevent damage of any kind, lower all pipe parts into the trench using suitable equipment and methods. Due to their low weight, HS®-Pipes and -Fittings up to DN/OD 250 can be placed in the trench manually. As a rule, HS®-Pipes or Fittings should NEVER be thrown.

Pipe laying
The embedment is defined by the lower bedding layer on the trench bottom and the initial backfill at the top. Given regular ground characteristics, the lower bedding layer must not be less than 100 mm deep. The initial backfill on top must be at least 150 mm above the pipe crown and 100 mm above the pipe connection (socket).

As a filling material for the embedment, we recommend compactable materials with little or no cohesion, with a rounded or broken-up form factor (cf. EN 1610). According to EN 1610, these materials must not contain any particles larger than 22 mm (up to DN 250) respectively 40 mm (DN > 200 to DN 600) respectively 60 mm (DN > 600). Deviating from this, the maximum permissible particle size for HS®-Pipes ranging from DN/OD 110 to DN/OD 250 is 32 mm instead of 22 mm (cf. installation scenario/page 20ff). HS®-Pipes can be laid at temperatures as low as -10 °C. When laying pipes at sub-zero temperatures, ensure that the filling material is not frozen (cf. EN 1610).

Installation of Funke HS®-Pipes

Recommendations for Installation

For HS®-Pipes
DN/OD 110 – DN/OD 800
When installing HS®-Pipes the EN 1610 and the EN 1295 standard has to be observed. The installation has to be made according to the static specifications. It is recommended to comply with the static specification of the embedment class S with a compaction of at least 90% according to BS EN 1295 standard. In principle all standards listed above apply in their entirety. Regardless of the nominal diameter the lower bedding layer has to be built up.

The breakdown into the following three categories according to the nominal diameters should give a recommendation for the backfilling of the initial backfill, sidefill and upper bedding layer.

DN110 – 250: In addition to the standards mentioned above, a simplified installation according to page 21ff can be applied here. This means to refill the bedding material in one step to crown height. After that the backfilling of the upper bedding and sidefill can be executed in one step.

DN315 – 500: For the "medium" nominal diameters the sidefilling has to be executed in two steps in order to comply with the standards. Due to the low pipe weight there is the risk that the pipe will be raised up during the backfilling of the upper bedding layer. To avoid this, the pipeline can be fixed by forming banks of backfill material in the area of the sockets. After backfilling of the upper bedding layer those areas have to be re-compacted.

DN 630-800: For the "larger" nominal diameters there would be no risk that the pipe raises up during the backfilling of upper first bedding layer due to the higher dead weight of the pipe. In this case, it is necessary to comply with the standards mentioned above. (The backfilling of the sidefill area has to be executed in steps appropriate to the soil condition and to the compaction devices that will be used.)

Trench properties and conditions
The stability of the trench must be ensured by appropriate trench support, scarping or some other appropriate measure. DIN 4124 is applicable, respectively national standards and regulations are applicable.

The trench width must comply with the requirements of the static calculation. The minimum trench diameter is determined by EN 1610 para 6.1 depending on the nominal width, the formation of the trench walls and the trench depth.

The bed of the trench must be constructed observing the required slope and shape. If the natural ground does not have the carrying capacity required, the bed of the trench must be deepened and a supporting surface made of compressible material must be provided. During construction works, trenches must always be kept free from water.

Piping
The pipeline zone is limited downwards by the lower bedding layer and upwards by the covering. The depth of the lower bedding layer must not be less than

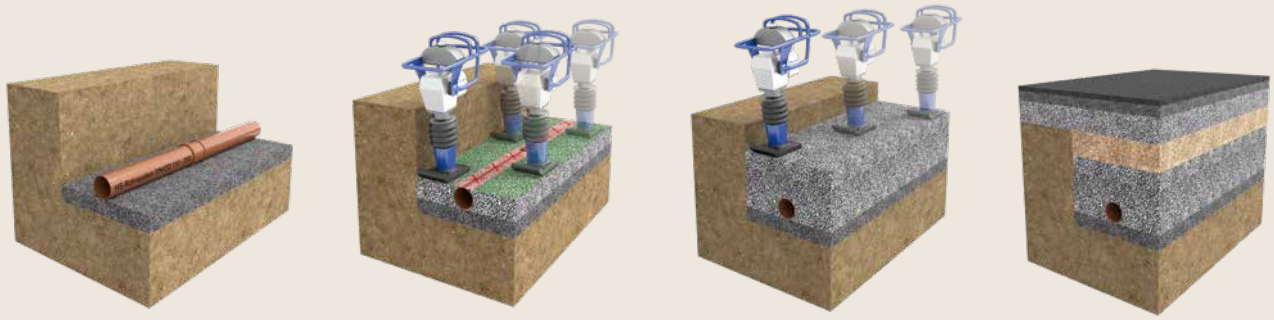

Simplified Installation

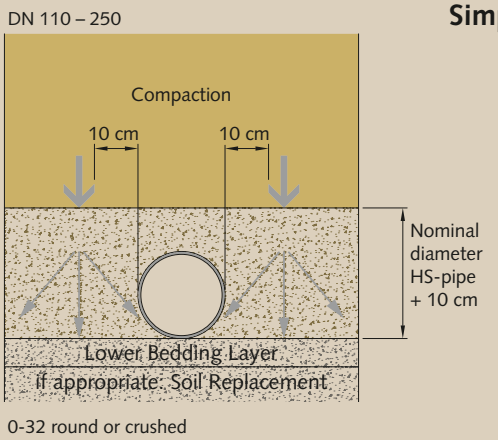

steps 1 to 4

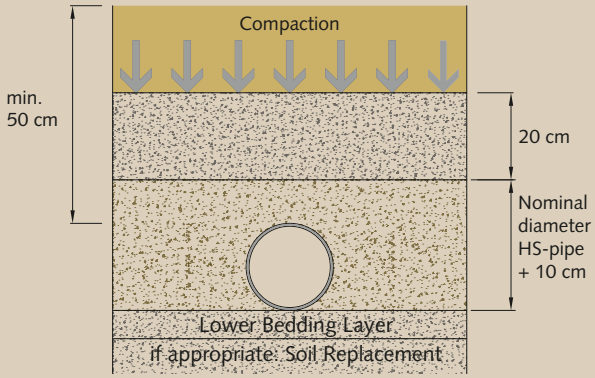

steps 5 to 6

100 mm under normal soil conditions. Minimum depth for the covering is 150 mm above the pipe shaft and 100 mm above the pipe joint.

Suitable materials for the embedment are compressible, cohesive or weakly cohesive, in rounded or crushed form (cf. EN 1610). Pursuant to EN 1610 such backfilling materials must not contain any components larger than 22 mm (up to DN 250) or 40 mm (DN > 200 to DN 600). For HS®-Pipes, however, materials with max. granulation of 32 mm instead of 22 mm are permissible with nominal diameters of DN/OD 110 to DN/OD 250 (see installation recommendations, page 20ff). Do not use frozen backfilling materials.

Piping works must start at the deepest point of the pipeline section. Pipes must be aligned in terms of position and height on the lower bedding layer. When pipes and fittings are installed, surfaces of the spigot and socket areas must be clean. The lubricant must be applied to the sealing and the chamfering in a thin and even layer. Then pipes must be connected centrically towards the pipe axis. When pipes are cut to length the cut must be made precisely and at right angles with the axis. For trimming and chamfering the pipes we recommend the HS®-Pipe Cutting and Chamfering Machine (page 17).

The area of the pipeline zone must be filled and compressed on either side of the pipeline in regular layers. Alternatively, the simplified procedure described below is allowed for HS®-Pipes with nominal diameters of DN/OD 110 to 250. The main filling must be carried out by layers. The individual dump heights depend on the compaction device and the filling material used. For example, chart 4 of the A 139 ATV worksheet provides guide values with regard to the suitability, dump heights and the minimum number of transitions depending on the type of compaction device. If required, the control of compaction must be carried out by means of driving tests or plate load tests during the execution of construction works and in accordance with the static calculation.

Proposal with regard to the execution of the pipeline zone for DN/OD 110 – DN/OD 250 HS®-Pipes

Due to the SDR 34 wall reinforcement of the HS®-Pipes and fittings we recommend a simplified installation according to the above shown diagram in addition to EN 1610 for pipes up to DN/OD 250. The installation shown has been scientifically examined and has proven itself over a number of years in use.

The creation of the pipeline zone has to be carried out carefully according to the planning and the requirements determined by the static calculation. The pipeline zone must be protected against any alteration of the carrying capacity, stability, or position. For subsurface installation within the pipeline zone up to 30 cm above the crown of the pipe the following procedure is recommended:

1. preparation and compaction of the bed of the trench (EN 1610);
2. installation of pipes and fittings in the lower bedding;
3. backfilling of the upper bedding layer with gravel, sand or other

Installation of Funke

approved construction materials in rounded or crushed form as graded mixture 0 – 32 mm up to 10 cm above the crown of the pipe;
Excerpts from EN 1610:2015-12 clauses 5.3.3.2 (and following)
Granular Materials
– single size granular material;
– graded granular material;
– sand;
– all-in aggregates;
– crushed aggregates;
– self-compacting filling materials
Some materials e.g. single size rounded-material, may not be suitable for all conditions.

4. soil compacting using a light vibro-tamper (25 – 60 kg) laterally, at a distance of 10 cm on either side of the pipe;
5. backfilling up to 30 cm above the crown of the pipe using the above-mentioned construction materials;
6. compaction as described above along the entire covering of the pipe.

Misalignment of the pipeline during compaction is avoided by immediate backfilling of the upper bedding layer up to 10 cm above the crown of the pipe. Lateral compaction at a distance of 10 cm on either side of the pipe ensures the compaction of the haunch area is sufficient for the HS®-Drainage Pipe System. Increased wall thicknesses were chosen in order to facilitate the installation of HS®-Pipes and Fittings by the user and to provide additional factors of safety.

Leak test
Leak tests of pipelines, chambers and inspection manholes have to be carried out using air ("A" process) or water ("W" process) pursuant to EN 1610 section 13.

Special cases

Multiple Trench
In the case of multiple trenches the minimum horizontal distance between the pipes must be observed. Unless stated otherwise, this distance must be 0.35 m for HS®-Pipes pursuant to EN 1610.

Self-Compacting Backfilling Materials
In general, the use of approved self-compacting filling materials (liquid soils) is allowed. If you wish to use such filling materials please contact us for technical clarification.

HS®-Pipes

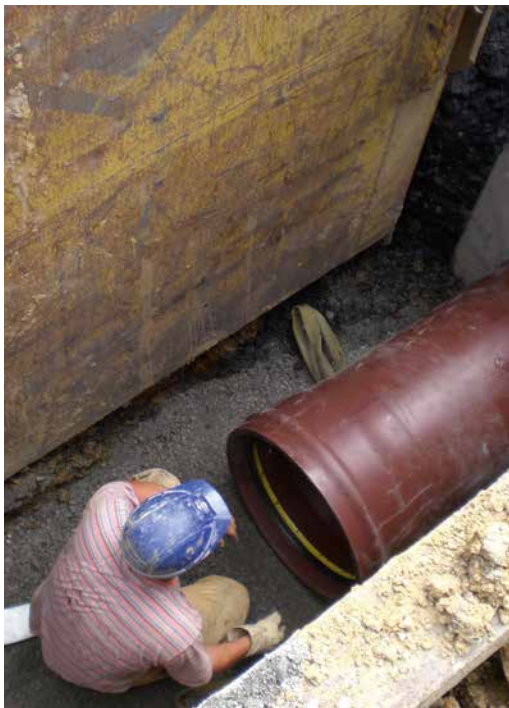

Slopes
Where pipelines are installed in scarps, reinforced concrete or clay slabs must be used in the longitudinal pipe direction in order to avoid the soil material along the pipeline from being washed away and to give the pipeline more stability.

Concrete bedding and casing
Direct concrete beddings or partial concrete casings are not permitted. If the use of concrete slabs in the bedding area is required for construction reasons, an intermediate layer of compactable soil having a depth of at least 100 mm + 1/10 of the nominal diameter must be provided between the pipe and the concrete slab. Where the use of a concrete casing is intended, that casing has to be provided in such a way that it absorbs the complete static and dynamic loads.

Material load
HS®-Pipes made of PVC-U are flexible and show a load bearing behaviour that is different from that of rigid pipes such as vitrified clay or concrete pipes. While loads are concentrated above the pipe in the case of rigid pipes, the great part of the earth and traffic loads is transmitted to the surrounding soil. Where loads are higher than foreseen, or if the load situations changes in the course of time, the only result would be a minor deformation of a flexible pipe while in the case of rigid pipes stability failure and thus the rupture of the material cannot be excluded.

This means that a low elastic modulus must be compensated by increasing the wall thickness in order to obtain the same annular rigidity. The elastic modulus is a characteristic value of the material describing the connection between tension and elongation when solids are deformed with linear elastic behaviour. Therefore, the elastic modulus represents an indicator of the solidity of the material. The annular rigidity or flectional resistance of a smooth-walled pipe (SN classification) is depending on the elastic modulus (short term) and the wall thickness of the material.

Due to the different elastic modulus values, wall thicknesses of PVC-U pipes are significantly smaller than in the case of PE or PP pipes. This means that the diameter/wall thickness ratio (SDR) is higher with the annular rigidity of the pipe being the same or even better and thus pipes and fittings made of PVC-U have advantages due to their lower weight and material costs.

Installation under frosty conditions
External opinions have shown that HS®-Pipes may be installed under frosty conditions with temperatures of up to -10 °C. With temperatures below freezing point it must be ensured that the backfilling material pursuant to EN 1610 is not frozen.

Hydraulic dimensions

The hydraulic dimensioning of gravity sewer channels will be carried out pursuant to the ATV worksheet A 110 "Hydraulic dimensions and efficiency of sewage water channels and sewer pipes" published in the August 2006 edition. Evidence is given according to the global or individual concept. For the dimensioning of sewage water channels still to be built, it is normally the global concept that is applied. The various loss factors are allowed for in the operational roughness k_b. Due to the particularly low wall roughness of plastic pipes, roughness values of k_b = 0.25 mm for straight channel sections or k_b = 0.4 mm for normal channels with lateral supplies are recommended and determined.

The following charts show the values for HS®-Pipes DN/OD 110 – 800 (wall-reinforced, annular rigidity measured min. 12 kN/m²) for k_b = 0.4 mm. In the case of straight channel sections of k_b = 0.25 a slightly higher hydraulic performance (approx. 4 – 5 %) can be expected.

Partial filling chart

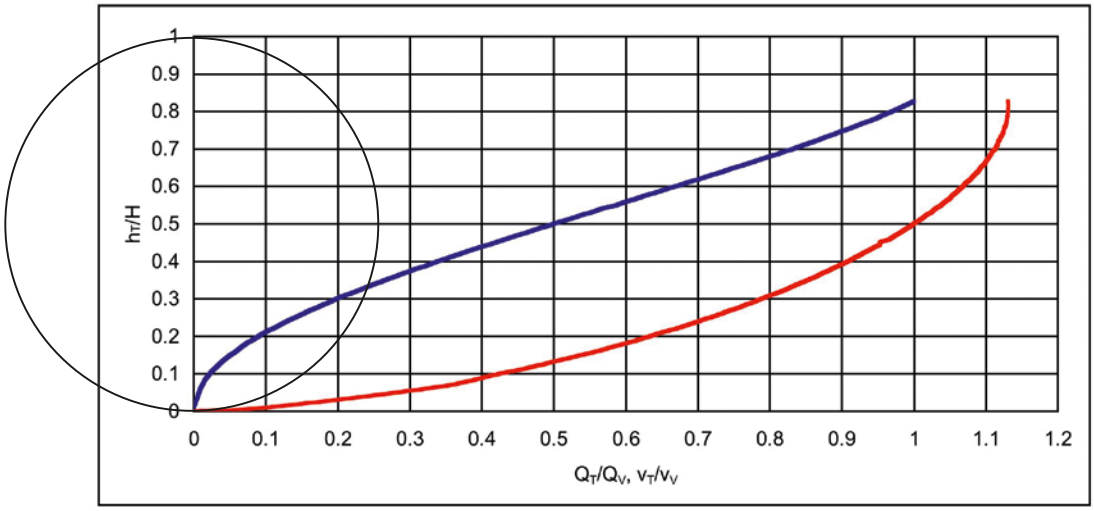

Q_V, Q_T = Flow with full filling or partial filling in l/s

v_V, v_T = Average flow rate with full filling or partial filling in m/s

H, h_T = Filling height with full filling or partial filling in m (Circular section H = inside diameter)

J_{So} = Invert gradient in ‰ (10‰ = 1 %)

# of HS®-Pipes

Chart of HS®-Pipes with full filling according to the Prandtl/Colebrook formula.

DN/OD		110		160		200		250		315		400		500		630		710		800	
s [mm]		3.6		5.5		6.6		8.2		10.0		12.6		16.5		22.0		22.5		25.0	
		Q	v	Q	v	Q	v	Q	v	Q	v	Q	v	Q	v	Q	v	Q	v	Q	v
		[l/s]	[m/s]	[l/s]	[m/s]	[l/s]	[m/s]	[l/s]	[m/s]	[l/s]	[m/s]	[l/s]	[m/s]	[l/s]	[m/s]	[l/s]	[m/s]	[l/s]	[m/s]	[l/s]	[m/s]
Invert gradient J_{S0} [‰]	1	2.05	0.25	5.56	0.32	10.2	0.37	18.4	0.43	34.2	0.50	64.5	0.58	115	0.67	210	0.78	284	0.82	393	0.89
	2	2.96	0.36	7.99	0.46	14.6	0.53	26.4	0.62	49.0	0.72	92.2	0.84	165	0.96	299	1.11	404	1.17	559	1.27
	3	3.66	0.44	9.86	0.57	18.0	0.66	32.5	0.76	60.3	0.88	113	1.03	202	1.18	368	1.36	497	1.44	686	1.55
	4	4.25	0.51	11.4	0.66	20.8	0.76	37.7	0.88	69.8	1.02	131	1.19	234	1.37	425	1.58	575	1.66	794	1.80
	5	4.77	0.58	12.8	0.74	23.4	0.85	42.3	0.99	78.3	1.15	147	1.33	262	1.53	476	1.77	643	1.86	889	2.01
	6	5.25	0.63	14.1	0.81	25.7	0.94	46.4	1.08	85.9	1.26	161	1.46	288	1.68	522	1.94	705	2.04	974	2.21
	7	5.68	0.68	15.2	0.87	27.8	1.01	50.2	1.17	92.9	1.36	175	1.58	311	1.82	565	2.09	762	2.21	1053	2.38
	8	6.09	0.73	16.3	0.94	29.7	1.08	53.7	1.25	99.4	1.45	187	1.69	333	1.94	604	2.24	815	2.36	1126	2.55
	9	6.47	0.78	17.3	0.99	31.6	1.15	57.0	1.33	106	1.54	198	1.80	353	2.06	641	2.38	865	2.51	1195	2.71
	10	6.82	0.82	18.3	1.05	33.3	1.22	60.2	1.40	111	1.63	209	1.90	373	2.18	676	2.51	912	2.64	1260	2.85
	15	8.40	1.01	22.5	1.29	40.9	1.49	73.9	1.72	137	2.00	257	2.33	457	2.67	830	3.08	1119	3.24	1546	3.50
	20	9.73	1.17	26.0	1.49	47.4	1.73	85.5	1.99	158	2.31	297	2.69	529	3.09	959	3.56	1293	3.75	1786	4.04
	30	12.0	1.44	32.0	1.83	58.2	2.12	105	2.45	194	2.84	364	3.30	649	3.79	1176	4.36	1585	4.59	2190	4.96
	40	13.8	1.67	37.0	2.12	67.3	2.45	121	2.83	224	3.28	421	3.82	750	4.38	1359	5.04	1832	5.31	2530	5.73
	50	15.5	1.87	41.4	2.38	75.3	2.75	136	3.17	251	3.67	471	4.27	839	4.90	1521	5.64	2049	5.93	2829	6.40
	60	17.0	2.05	45.4	2.60	82.5	3.01	149	3.47	275	4.03	516	4.68	919	5.37	1666	6.18	2245	6.50	3100	7.02
	70	18.4	2.21	49.1	2.82	89.2	3.26	161	3.75	297	4.35	558	5.06	993	5.80	1800	6.68	2425	7.02	3350	7.58
	80	19.7	2.37	52.5	3.01	95.4	3.48	172	4.01	318	4.65	596	5.41	1062	6.20	1925	7.14	2593	7.51	3581	8.11
	100	22.0	2.65	58.8	3.37	107	3.90	192	4.49	356	5.20	667	6.05	1188	6.94	2153	7.98	2900	8.40	4005	9.07
	120	24.1	2.91	64.4	3.69	117	4.27	211	4.92	390	5.70	731	6.63	1302	7.60	2360	8.75	3178	9.20	4388	9.93
	150	27.0	3.25	72.1	4.13	131	4.78	236	5.51	436	6.38	818	7.41	1456	8.50	2639	9.78	3554	10.29	4907	11.11

Partially charged values can be established from the „Partially filling chart“ from page 24.

Funke's quality

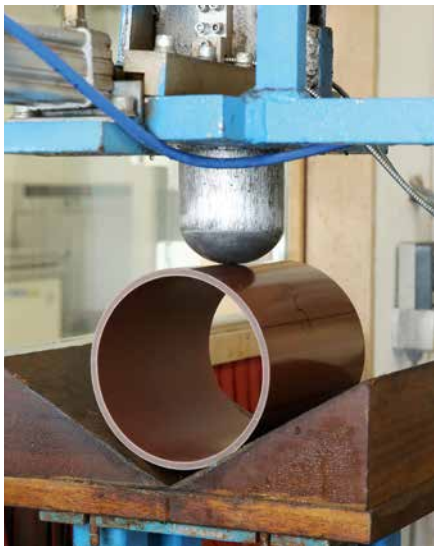

12,5 kg from a height of 2 m (-10 °C)

Impact Test Pursuant to EN 744

The resistance of the pipes against external impact stress is tested pursuant to EN 744. Test pieces in the form of pipe sections are exposed at 0°C to the impact of a falling weight, that falls onto the test piece in determined positions distributed over the circumference from a pre-determined height. The impact surface of the drop weight is the shape of a ball. In the case of nominal pipe diameters DN/OD 250 for instance, this would mean that the test piece is subjected to the impact of a falling weight of 2.5 kg from a height of 2 m at 0°C.

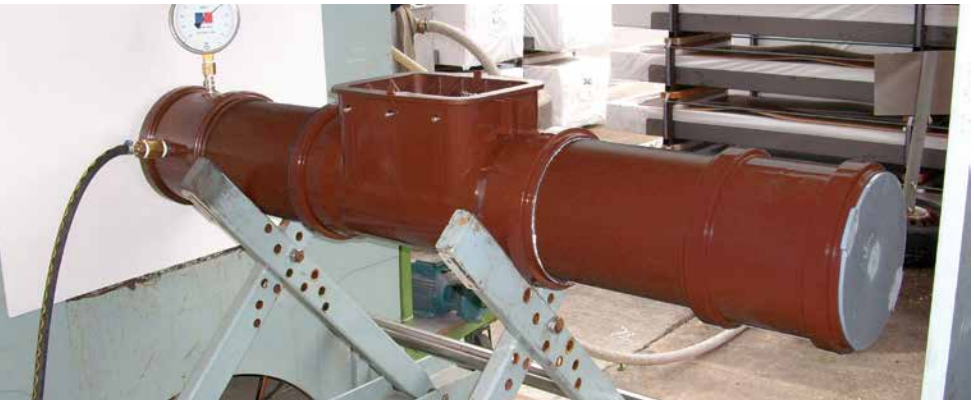

Tightness of Pipe Connection

The tightness of pipe connections is tested pursuant to EN 1277. Three conditions are examined: condition A (without deformation and bending), B (with deformations pointed ends 10% and sleeve 5%) and C (bending 2°). The tightness of HS®-Pipe connections is evidenced by an independent test centre for all three conditions both with an air depression of -0.3 bar and for an increased water internal pressure of 2.5 bar.

Installation up to -10 °C

In order to determine the suitability of the pipes for installation at temperatures below freezing point, smooth-walled pipes offer the possibility to carry out the step test pursuant to EN 1411 in addition to the test method pursuant to EN 744. During that test, test pieces in the shape of pipe sections will be exposed at 0°C to the impact of a drop hammer the impact surface of which is also spherical. The weight of the drop hammer depends on the fall height which will be increased until a test piece fails the test, the maximum height being 2 m. For the examination of the nominal diameters pipe DN/OD 250 the weight of the drop hammer is 12.5 kg. Following successful testing (external test certificate) the HS®-Pipes are marked with the corresponding ice crystal symbol and may be installed at temperatures of up to -10 °C.

Diametrical Load Test

The annular rigidity S of a pipe is a characteristic value describing the resistance of an annulus against external strain. This is the basis of the classification into SN classes. The annular rigidity is determined through the diametrical load test pursuant to EN ISO 9969 where a pipe section of 30 cm length is positioned between two parallel arranged panels and charged at a defined constant speed. The amount of force necessary to create a deformation of 3 % of the pipe wall diameter forms the basis of the determination of the annular rigidity.

assurance

WIS – Water Industry Standard

The WRc tested Funke HS®-Drainage Pipe in accordance to WIS 4-35-01:2008
The WIS 4-35-01:2008 has three performance requirements:

- Appendix A: Resistance to internal puncture…
- Appendix B: Resistance to water jetting pressure…
- Appendix C: Longitudinal bending…

The WRc Report Ref: UC 12489 v2 confirms that Funke PVC-U HS®-Drainage Pipes meet the requirements of WIS 4-35-01:2008. The HS®-Drainage Pipe system is a single wall pipe system available in diameters between DN/OD 110 mm to 800 mm (12kN/m²) and DN/OD 160 mm to 630 mm (16 kN/m²).

International / National and Regional Requirements
In addition to the requirement of WIS 4-35-01:2008 the HS®-Drainage Pipe System has been tested to various national and international requirements. Information on reports with exceeding jetting performance is available upon request.

High Pressure Jetting Resistance
The HS®-Underground Drainage Pipe System was tested for resistance to high pressure jetting in accordance with CEN/TR 14920. The jet power density specified by CEN/TR was 460 W/mm². The stress defining parameter (w/mm²) was also subjected to an additional resistance test at an increased density of 1150 W/mm². No notable damage to the pipe surface was detected.

Longitudinal Bending (High Strength)
According to WIS 4-35-01:2008 a pipe shall not bend by more than 5 % if the maximum length of pipe sold by a manufacturer is placed on two end supports. The HS®-Drainage Pipes performed considerably better than required. Due to the high e-modulus of uPVC (short term 3000 N/mm² – long term 1.500 N/mm²) and the minimum ring stiffness of 12 kN/m², HS®-Pipes provide real longitudinal strength.

Excerpt from WRc test report, Report Ref.: UC12589 v2

Diameter (mm)	Allowable deflection 5 %	Measured deflection	Observation	P / F
600	30 mm	1.39 mm	None	Pass
110	5.5 mm	0.5 mm	None	Pass

Summary of longitudinal bending

The actual longitudinal strength can be determined by measuring the bowing that occurs during a 3-point bending test. For example, the DN/OD 315 HS®-Pipe has a short-term longitudinal strength of 395 kN/m². That figure corresponds to a pipe length of 3 m and a centrally-located pressure of 1000 kg, with a maximum extrapolated bending of 26 mm after 50 years.

Tests for the determination of the pressure jetting resistance (picture top and centre) and longitudinal bending (picture bottom)

German Institute for Building Technology

BSI (Fittings) KM45958

(Fabekun® Junction and CONNEX-Junction)

Including WIS-Standard 4-35-01 October 2008

Approvals/Certificates

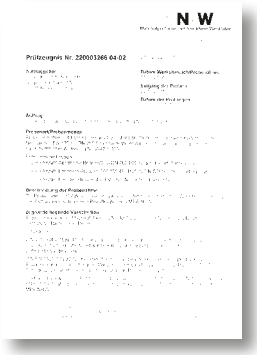

Roots

Drainage pipe systems installed in housing development areas should be able to permanently resist root intrusion. This is the only way to prevent environmental impairments and incurring restoration costs as a result of the damage caused. The analysis of a unique simulated 'in-pot' experiment conducted by Rhineland Chamber of Agriculture in the Horticultural Centre in Essen, Germany over a period of more than 10 years between 1996 and 2007, proved that HS®-Pipes and -Fittings are totally resistant to root intrusion.

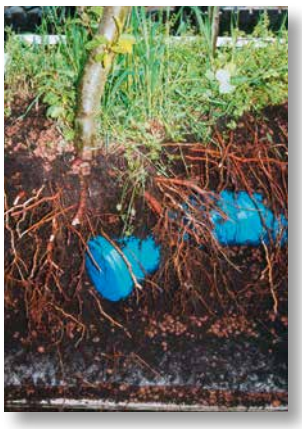

Technical Drawings

HS®-Pipe plain ended

DN/OD	s 12 kN	s 16 kN	L
110	3.6		0.5 m; 1.5 m; 3 m; 5 m
160	5.5	6.0	
200	6.6	7.5	
250	8.2	9.3	
315	10.0	11.7	0.5 m; 3 m

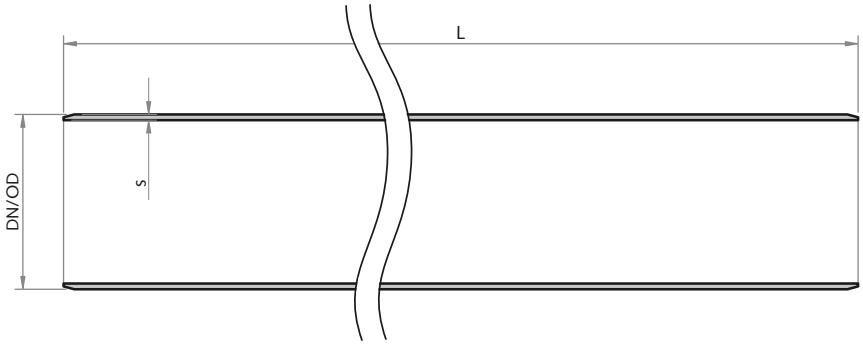

HS®-Pipe with Socket

DN/OD	dsa, ca.	LM, ca.	s 12 kN	s 16 kN	L
400	440	175	12.6	14.9	0.5 m; 3 m
500	550	200	16.5	18.6	
630	720	260	22.0	22.0	
710	810	325	22.5	–	3 m
800	900	330	25.0	–	3 m

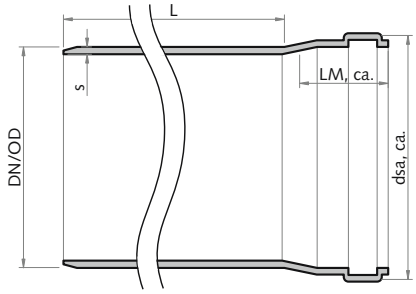

DN/OD 630 – 800

HS®-Coupler DN/OD 110 – 315

DN/OD	x	L	dsa
110	2	125	130
160	3	175	185
200	7	210	230
250	8	250	290
315	10	280	360

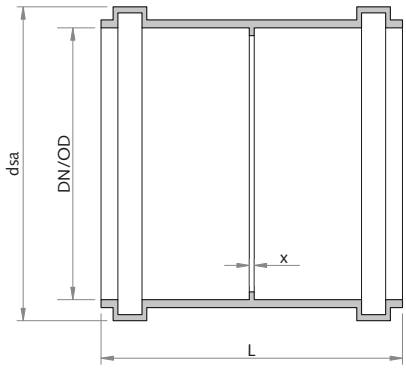

HS®-Repair Coupler DN/OD 110 – 800

DN/OD	L, ca.	dsa
110	125	130
160	175	185
200	210	230
250	250	290
315	300	360
400	350	460
500	400	575
630	440	720
710	460	810
800	530	900

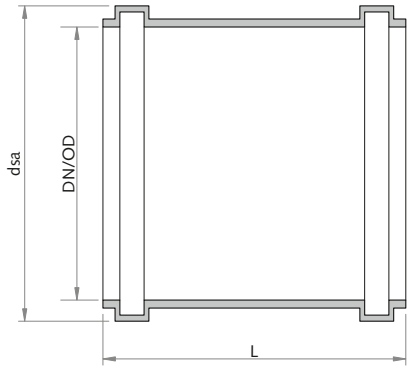

Technical Drawings

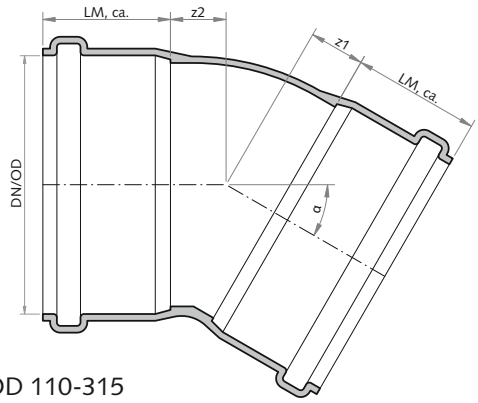

DN/OD 110-315

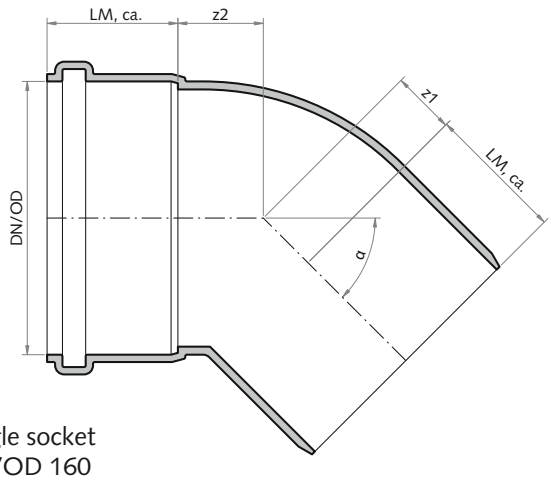

Single socket
DN/OD 160

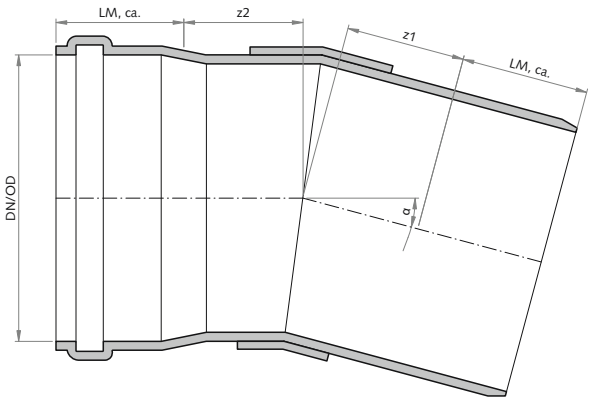

DN/OD 400-800

HS®-Bend DN/OD 110 – 800

DN/OD	LM, ca.	α	z1	z2
110	55	15°	17	17
		30°	25	25
		45°	30	30
		87°, swept	140	140
160	75	15°	30	30
		15°, elbow*	15	30
		30°	40	40
		30°, elbow*	25	40
		45°	55	55
		45°, elbow*	35	55
200	100	15°	25	25
		30°	40	40
		45°	55	55
250	110	15°	30	30
		30°	50	50
		45°	70	70
315	115	15°	40	40
		30°	65	65
		45°	90	90
400	175	15° *	170	170
		30° *	195	195
		45° *	240	240
500	200	15° *	230	230
		30° *	265	265
		45° *	330	330
630	260	15° *	270	270
		30° *	385	385
		45° *	455	455
710	325	15° *	220	220
		30° *	330	330
		45° *	410	410
800	330	15° *	220	220
		30° *	330	330
		45° *	420	420

*= Single Socket

Technical changes reserved.
All measures of length in [mm].

HS®-Branch DN/OD 110 – 315 Triple Socket

DN/OD	ds	α	LM 1, ca.	LM 2, ca.	z1	z2	z3	L
110	110	45°	55	55	30	135	140	280
110	110	87°	55	55	85	85	60	255
160	110	45°	75	55	40	320	190	380
160	160	45°	75	75	40	205	190	380
200	160	45°	100	75	40	235	210	450
200	200	45°	100	100	55	245	220	475
250*	160	45°	110	70	45	280	275	540
250*	200	45°	110	90	45	285	275	540
250	250	45°	110	110	190	310	320	740
315	160	45°	115	75	10	325	320	560
315	200	45°	115	100	10	335	320	560
315	250	45°	135	120	290	540	580	1140
315	315	87°	135	135	350	400	370	990

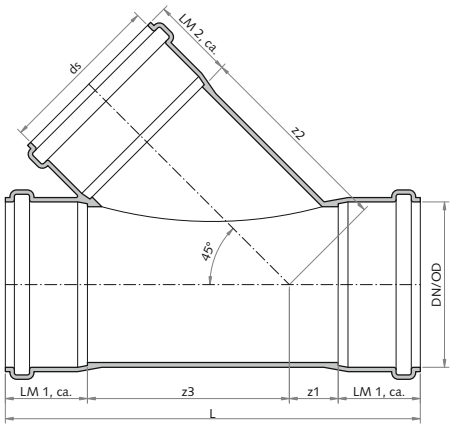

*HS®-VARIO socket (enclosed unassembled)

HS®-Branch DN/OD 400 – 800 Double Socket

DN/OD	ds	α	LM 1, ca.	LM 2, ca.	z1	z2	z3	L
400*	160	45°	175	70	- 80	465	440	710
400*	200	45°	175	90	- 105	510	465	710
400	250	45°	175	120	140	600	510	1000
400	315	45°	175	135	140	630	510	1000
400	400	87°	175	175	565	300	585	1500
500*	160	45°	200	70	605	535	495	1500
500*	200	45°	200	90	575	580	525	1500
500	250	45°	200	120	315	665	785*	1500
500	315	45°	200	135	315	695	785	1500
500	400	45°	200	175	315	680	785	1500
500	500	87°	200	200	540	370	560	1500
630	160	45°	260	90	195	695	785	1500
630	200	45°	260	100	195	730	785	1500
630	250	45°	260	120	195	795	785	1500
630	315	45°	260	135	195	775	785	1500
630	400	45°	260	175	195	795	785	1500
710	160	45°	325	90	90	740	760	1500
710	200	45°	325	100	90	775	760	1500
710	250	45°	325	120	90	850	760	1500
710	315	45°	325	135	90	825	760	1500
710	400	45°	325	175	90	850	760	1500
800	160	45°	330	90	45	800	795	1500
800	200	45°	330	100	45	835	795	1500
800	250	45°	330	120	45	910	795	1500
800	315	45°	330	135	45	900	795	1500
800	400	45°	330	175	45	910	795	1500

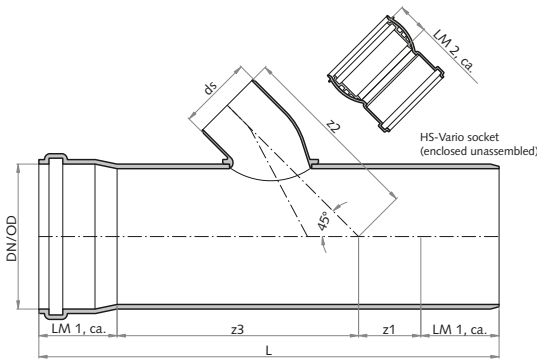

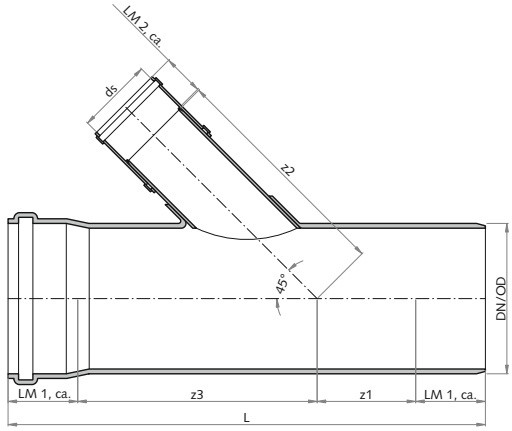

*HS-VARIO socket (enclosed unassembled)

Technical Drawings

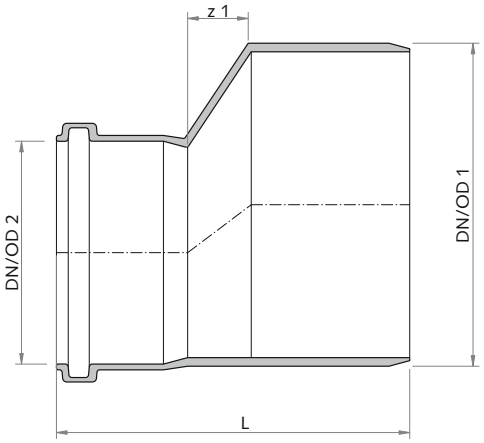

HS®-Reducer DN/OD 110 – 800

DN/OD 1	DN/OD 2	z1	L
160	110	30	175
200	160	30	205
250	200	10	230
315	250	10	285
400	315	20	380
500	400	20	480
630	500	20	575
710	630	20	675
800	710	20	725

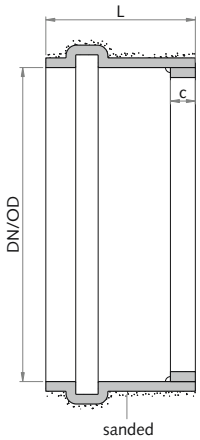

HS®-Chamber Socket DN/OD 110 – 800

DN/OD	L	c
110	150	90
160	150	65
200	150	50
250	150	30
315	150	25
400	150	25
500	150	25
630	225	25
710	255	25
800	275	25

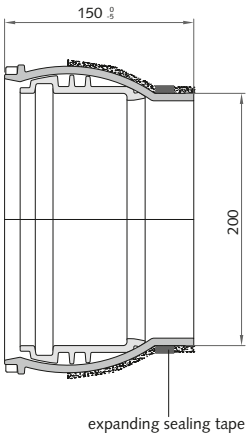

HS®-VARIO Chamber Socket DN/OD 160 und 200

DN/OD	L	c
160	150	72
200	150	53

Technical changes reserved.

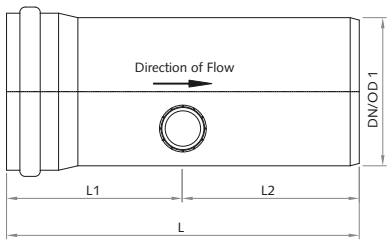

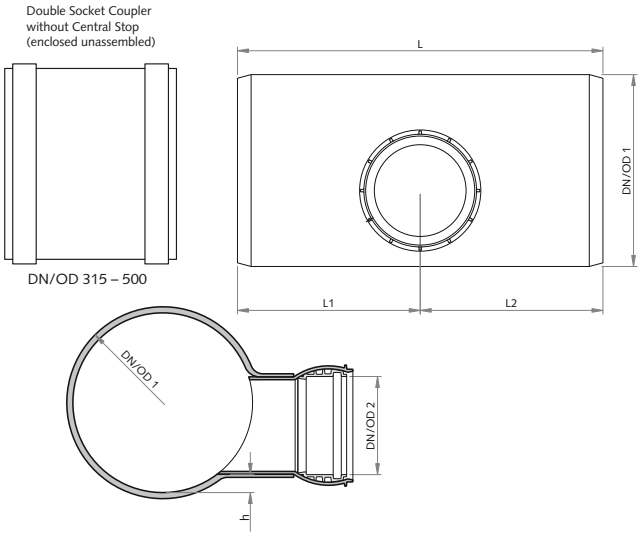

HS®-VARIO Branch invert level 90°

DN/OD 1	DN/OD 2	L	L1 = L2	h
315[1]	160	600	300	30
315[1]	200	600	300	30
400[1]	160	750	375	40
400[1]	200	750	375	40
500[1]	160	1200	600	50
500[1]	200	1200	600	50
630[2]	160	1500	750	60
630[2]	200	1500	750	60
710[2]	160	1500	750	70
710[2]	200	1500	750	70
800[2]	160	1500	750	80
800[2]	200	1500	750	80

1. Plain Ended + Double Socket Coupler without Central Stop
2. including one pre-moulded socket.

HS®-VARIO Socket DN/OD 110 to DN/OD 200, socket/spigot

DN/OD	dsa	L1	L2	L	A
160	199	97	135	232	68
200	245	120	140	260	87

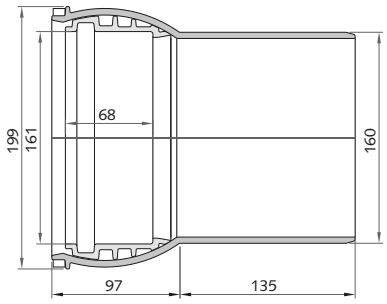

HS®-VARIO Socket DN/OD 110 to DN/OD 200, double socket

DN/OD	dsa	L1	L2	L	A
160	199	105	76	181	68
200	243	130	90	220	87

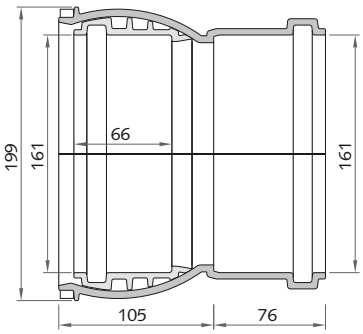

All measures of length in [mm].

Technical Drawings

HS®-Chamber DN 800 Type 1 Class D

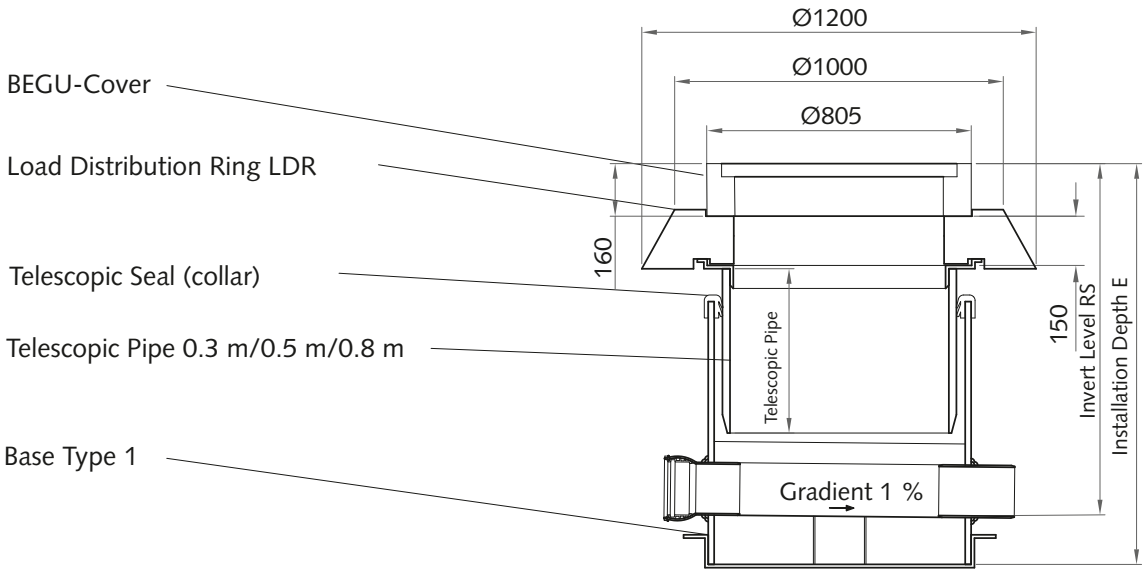

HS®-Chamber DN/OD 800 Type 1 Class D

DN/OD	LR	E (with LDR)	RS (with LDR)
Telescopic Pipe 0.3 m		Class D	
110 – 200	0.8	1220 – 1320	1070 – 1170
250 – 400	1.0	1420 – 1520	1270 – 1370
500	1.2	1620 – 1720	1470 – 1570
Telescopic Pipe 0.5 m			
110 – 200	0.8	1220 – 1520	1070 – 1370
250 – 400	1.0	1420 – 1720	1270 – 1570
500	1.2	1620 – 1920	1470 – 2770
Telescopic Pipe 0.8 m			
110 – 200	0.8	1220 – 1820	1070 – 1670
250 – 400	1.0	1420 – 2020	1270 – 1870
500	1.2	1620 – 2220	1470 – 2070

Channel options DN/OD 800 Type 1 and 2

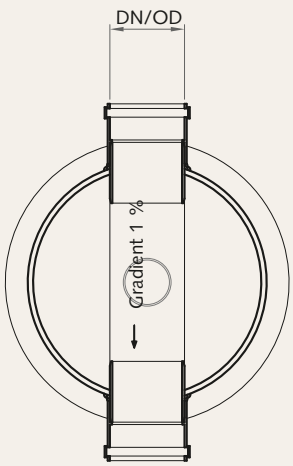

DN/OD 160 - 500

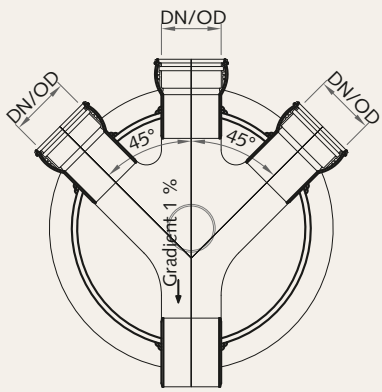

DN/OD 160
DN/OD 200

Technical changes reserved.

More chamber options upon request.

HS®-Chamber DN 800 Type 1 Class B

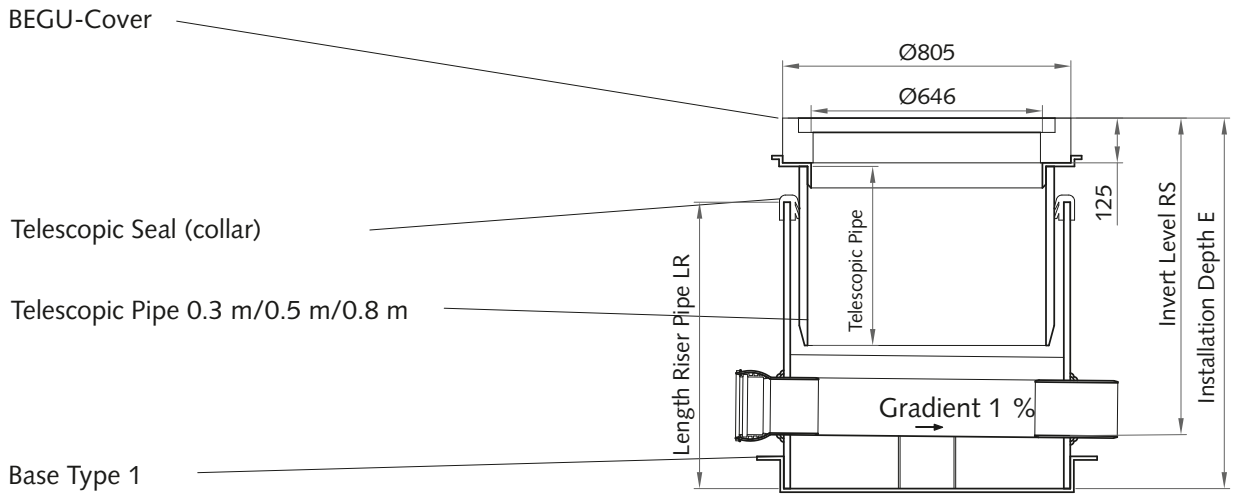

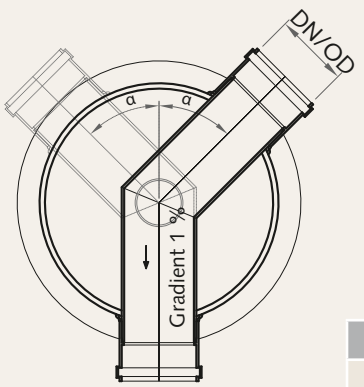

DN/OD	max. °
110 – 250	90°
315	60°
400	30°
500	15°

HS®-Chamber DN/OD 800 Type 1 Class B

DN/OD	LR	E (without LDR)	RS (without LDR)
Telescopic Pipe 0.3 m		Class B	
110 – 200	0,8	1035 – 1135	885 – 985
250 – 400	1,0	1235 – 1355	1085 – 1185
500	1,2	1435 – 1535	1275 – 1375
Telescopic Pipe 0.5 m			
110 – 200	0,8	1035 – 1335	885 – 1185
250 – 400	1,0	1235 – 1335	1085 – 1385
500	1,2	1435 – 1735	1275 – 1575
Telescopic Pipe 0.8 m			
110 – 200	0,8	1035 – 1635	885 – 1485
250 – 400	1,0	1235 – 1835	1085 – 1685
500	1,2	1435 – 2035	1275 – 1875

LDR = Load Distribution Ring
LR = Length Riser Pipe
RS = Invert Level
E = Installation Depth

All measures of length in [mm].

Technical Drawings

HS®-Chamber DN 800 Type 2 Class D

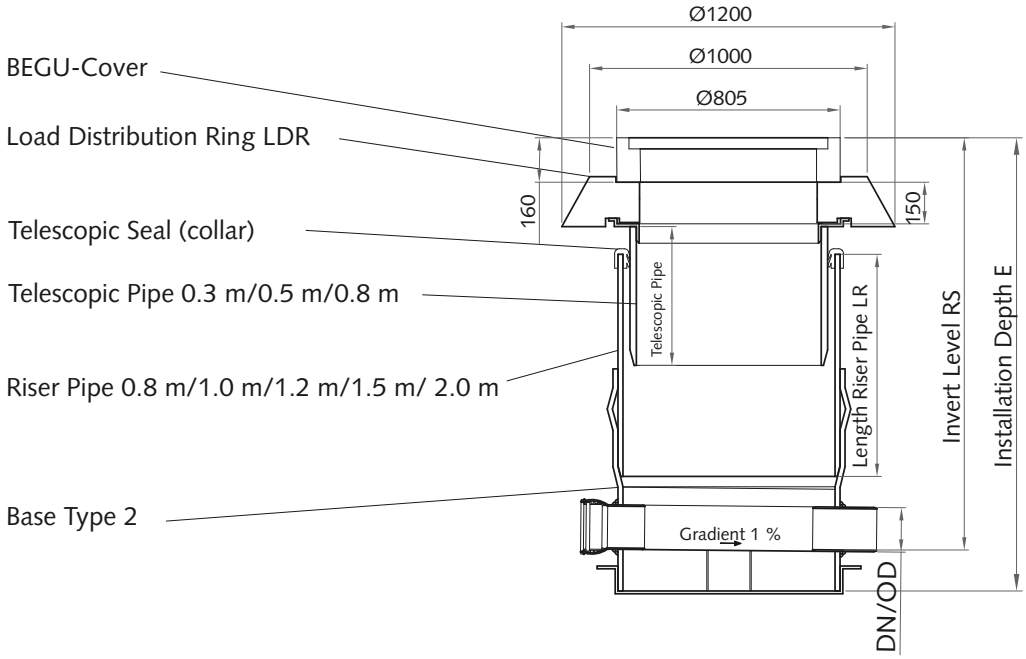

HS®-Chamber DN/OD 800 Type 2

DN/OD	LR	E (with LDR)	RS (with LDR)
Telescopic Pipe 0.3 m		Class D	
110 – 200	0.8	1645 – 1745	1495 – 1595
	1.0	1845 – 1945	1695 – 1795
	1.2	2045 – 2145	1895 – 1995
	1.5	2345 – 2445	2195 – 2295
	2.0	2845 – 2945	2695 – 2795
Telescopic Pipe 0.5 m			
110 – 200	0.8	1645 – 1945	1495 – 1795
	1.0	1845 – 2145	1695 – 1995
	1.2	2045 – 2345	1895 – 2195
	1.5	2345 – 2645	2195 – 2495
	2.0	2845 – 3145	2695 – 2995
Telescopic Pipe 0.8 m			
110 – 200	0.8	1645 – 2245	1495 – 2095
	1.0	1845 – 2445	1695 – 2295
	1.2	2045 – 2645	1895 – 2495
	1.5	2345 – 2945	2195 – 2795
	2.0	2845 – 3445	2695 – 3295

DN/OD	LR	E (with LDR)	RS (with LDR)
Telescopic Pipe 0.3 m		Class D	
250 – 400	0.8	1845 – 1945	1690 – 1790
	1.0	2045 – 2145	1890 – 1990
	1.2	2245 – 2345	2090 – 2190
	1.5	2545 – 2645	2390 – 2490
	2.0	3045 – 3145	2890 – 2990
Telescopic Pipe 0.5 m			
250 – 400	0.8	1845 – 2145	1690 – 1990
	1.0	2045 – 2345	1890 – 2190
	1.2	2245 – 2545	2090 – 2390
	1.5	2545 – 2845	2390 – 2690
	2.0	3045 – 3345	2890 – 3190
Telescopic Pipe 0.8 m			
250 – 400	0.8	1845 – 2445	1690 – 2290
	1.0	2045 – 2645	1890 – 2490
	1.2	2245 – 2845	2090 – 2690
	1.5	2545 – 3145	2390 – 2990
	2.0	3045 – 3645	2890 – 3490

Channel options DN/OD 800 Type 1 and 2

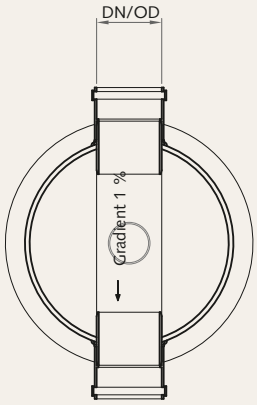

DN/OD 160 - 500

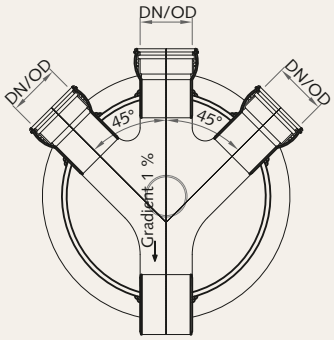

DN/OD 160
DN/OD 200

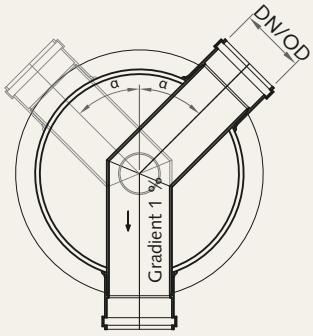

DN/OD	max. °
110 – 250	90°
315	60°
400	30°
500	15°

More chamber options upon request.

DN/OD	LR	E (with LDR)	RS (with LDR)
Telescopic Pipe 0.3 m		Class D	
500	0.8	2045 – 2145	1885 – 1985
	1.0	2245 – 2345	2085 – 2185
	1.2	2445 – 2545	2285 – 2385
	1.5	2745 – 2845	2585 – 2685
	2.0	3245 – 3345	3085 – 3185
Telescopic Pipe 0.5 m			
500	0.8	2045 – 2345	1885 – 2185
	1.0	2245 – 2545	2085 – 2385
	1.2	2445 – 2745	2285 – 2585
	1.5	2745 – 3045	2585 – 2885
	2.0	3245 – 3545	3085 – 3385
Telescopic Pipe 0.8 m			
500	0.8	2045 – 2745	1885 – 2485
	1.0	2245 – 2845	2085 – 2685
	1.2	2445 – 3045	2285 – 2885
	1.5	2745 – 3345	2585 – 3185
	2.0	3245 – 3845	3085 – 3685

LDR = Load Distribution Ring
LR = Length Riser Pipe
RS = Invert Level
E = Installation Depth

Technical changes reserved.
All measures of length in [mm].

Technical Drawings

HS®-Chamber DN 800 Type 2 Class B

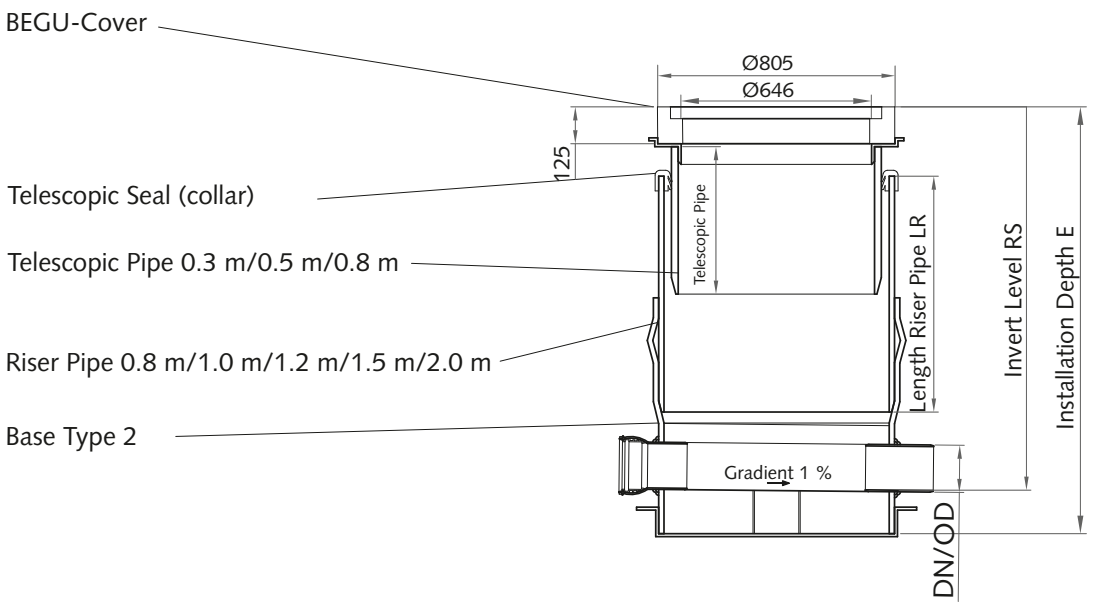

HS®-Chamber DN/OD 800 Type 2

DN/OD	LR	E (without LDR)	RS (without LDR)
Telescopic Pipe 0.3 m		Class B	
110 – 200	0.8	1450 – 1550	1300 – 1400
	1.0	1650 – 1750	1500 – 1600
	1.2	1850 – 1950	1700 – 1800
	1.5	2150 – 2250	2000 – 2100
	2.0	2650 – 2750	2500 – 2600
Telescopic Pipe 0.5 m			
110 – 200	0.8	1450 – 1750	1300 – 1600
	1.0	1650 – 1950	1500 – 1800
	1.2	1850 – 2150	1700 – 2000
	1.5	2150 – 2450	2000 – 2300
	2.0	2650 – 2950	2500 – 2800
Telescopic Pipe 0.8 m			
110 – 200	0.8	1450 – 2050	1300 – 1900
	1.0	1650 – 2250	1500 – 2100
	1.2	1850 – 2450	1700 – 2300
	1.5	2150 – 2750	2000 – 2600
	2.0	2650 – 3250	2500 – 3100

DN/OD	LR	E (without LDR)	RS (without LDR)
Telescopic Pipe 0.3 m		Class B	
250 – 400	0.8	1650 – 1750	1495 – 1595
	1.0	1850 – 1950	1695 – 1795
	1.2	2050 – 2150	1895 – 1995
	1.5	2350 – 2450	2195 – 2295
	2.0	2850 – 2950	2695 – 2795
Telescopic Pipe 0.5 m			
250 – 400	0.8	1650 – 1950	1495 – 1795
	1.0	1850 – 2150	1695 – 1995
	1.2	2050 – 2350	1895 – 2195
	1.5	2350 – 2750	2195 – 2495
	2.0	2850 – 3150	2695 – 2995
Telescopic Pipe 0.8 m			
250 – 400	0.8	1650 – 2250	1495 – 2095
	1.0	1850 – 2450	1695 – 2295
	1.2	2050 – 2650	1895 – 2495
	1.5	2350 – 2950	2195 – 2795
	2.0	2850 – 3450	2695 – 3295

Channel options DN/OD 800 Type 1 and 2

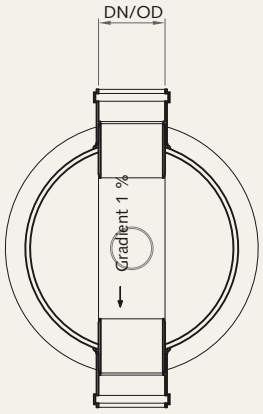

DN/OD 160 - 500

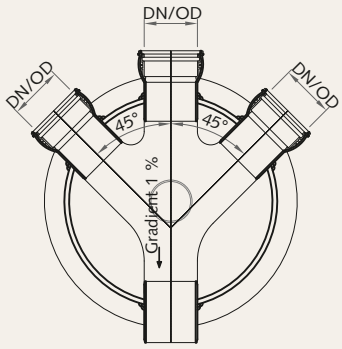

DN/OD 160
DN/OD 200

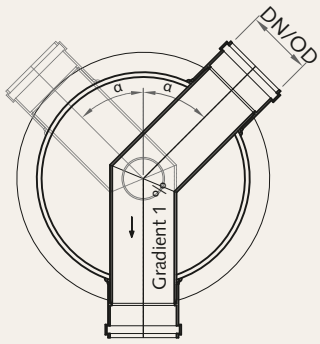

DN/OD	max. °
110 – 250	90°
315	60°
400	30°
500	15°

More chamber options upon request.

DN/OD	LR	E (without LDR)	RS (without LDR)
Telescopic Pipe 0.3 m		Class B	
500	0.8	1850 – 1950	1690 – 1790
	1.0	2050 – 2150	1890 – 1990
	1.2	2250 – 2350	2090 – 2190
	1.5	2550 – 2650	2390 – 2490
	2.0	3050 – 3150	2890 – 2990
Telescopic Pipe 0.5 m			
500	0.8	1850 – 2150	1690 – 1990
	1.0	2050 – 2350	1890 – 2190
	1.2	2250 – 2550	2090 – 2390
	1.5	2550 – 2850	2390 – 2790
	2.0	3050 – 3350	2890 – 3190
Telescopic Pipe 0.8 m			
500	0.8	1850 – 2450	1690 – 2290
	1.0	2050 – 2650	1890 – 2490
	1.2	2250 – 2850	2090 – 2690
	1.5	2550 – 3150	2390 – 2990
	2.0	3050 – 3650	2890 – 3490

LDR = Load Distribution Ring
LR = Length Riser Pipe
RS = Invert Level
E = Installation Depth

Technical changes reserved.
All measures of length in [mm].

Technical Drawings

HS®-Chamber DN 630 Type 1 Class B + D

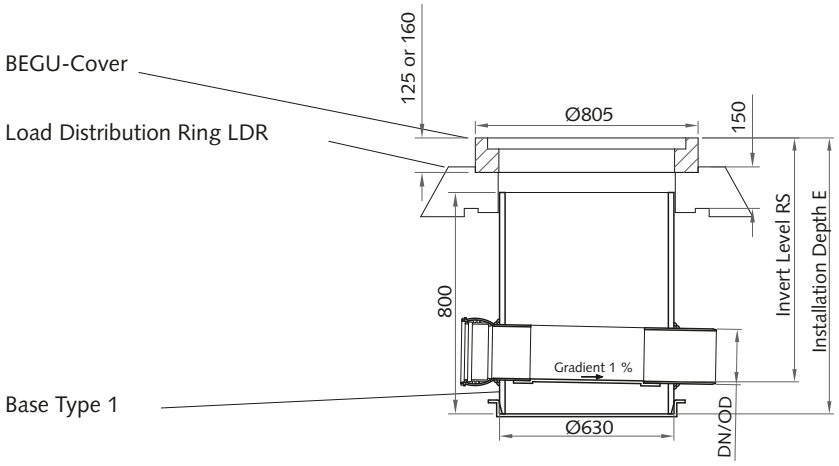

160 = D
125 = B

HS®-Chamber DN 630 Type 2 Class B + D

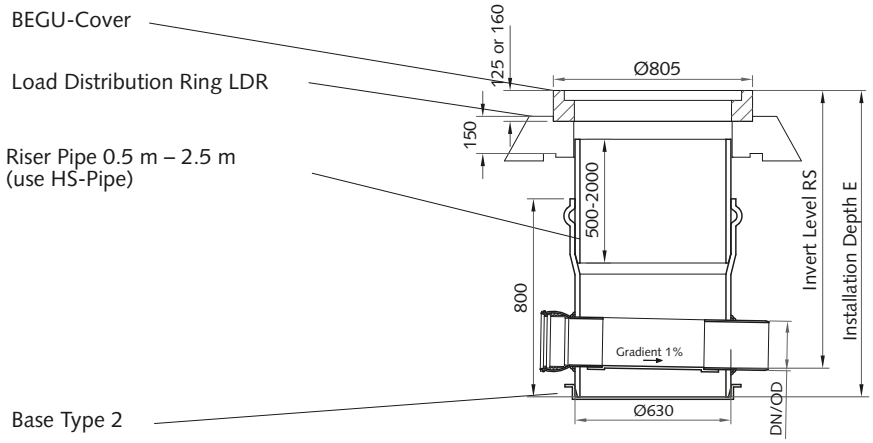

HS®-Chamber DN/OD 630

DN/OD	Type 1				Type 2			
	Class B		Class D		Class B		Class D	
	E	RS	E	RS	E	RS	E	RS
160 – 315	1000	880	1035	915	1240 – 3240	1120 – 3120	1275 – 3275	1155 – 3155

Channel options DN/OD 630 Type 1 and 2

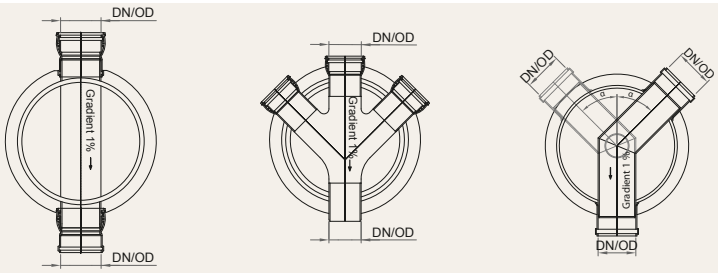

DN/OD	Type 1
110 – 200	90°
250	45°
315	30°

More chamber options upon request.

HS®-Chamber DN 400 Type 1

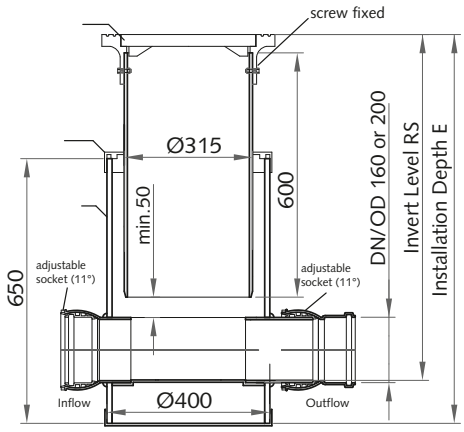

Type 2

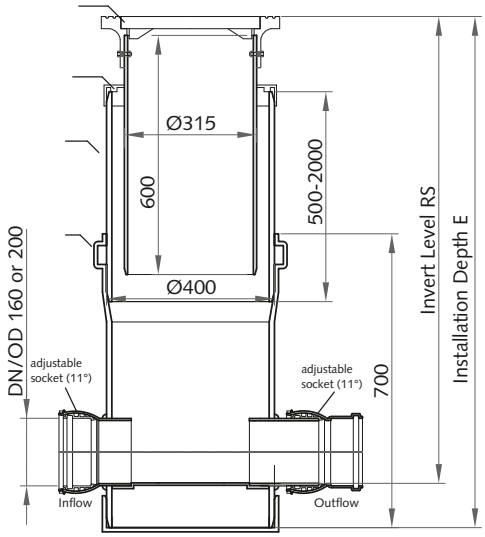

HS®-Chamber DN/OD 400 Class D

DN/OD	Type 1		Type 2	
	E	RS	E	RS
160	955 – 1155	880 – 1050	1220 – 3005	1110 – 2895
200	995 – 1155	895 – 1050	1220 – 3005	1110 – 2895

Channel options DN/OD 400 Type 1 and 2

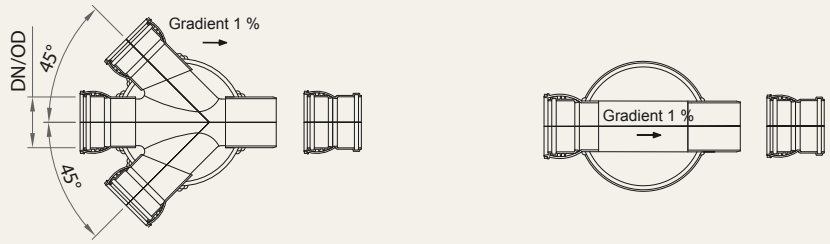

Technical changes reserved.
All measures of length in [mm].

More products from **Funke**

uniTec Sewer Connection

DN/OD 160
for main pipes DN 300–2400

CONNEX Junction

DN/OD 160–200
for main pipes DN 200–1500

FABEKUN Junction

DN/OD 160 and 200
for main pipes DN 250–2400

Complete Saddle Set

DN/OD 110–710
for main pipes DN 200–2400

Funke Telescope Connection

DN/OD 160 and 200
for wall thicknesses of 180–560 mm

Funke Renovation Socket

DN/OD 160 and DN/OD 200
for main pipes DN 300–1000

Pipe Liner Lateral Connection System CONNEX

for main pipes DN 250–1500

HS®-VARIO Connection

DN/OD 160
for main pipes DN 300–1000

HS®-Adhesive Saddle for Liners

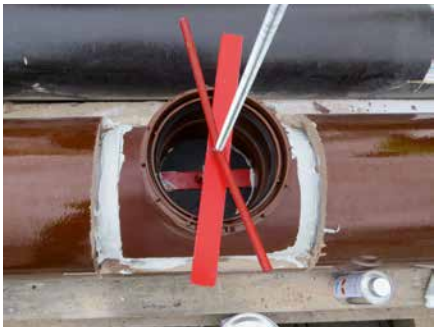

DN/OD 160 and 200
for main pipes DN 200–500

VPC® Flexible Pipe Coupler

100–2400

Funke BI-Adapter®

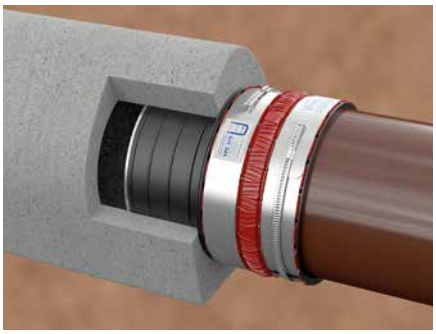

DN 150–1000

Funke BSM-Adapter®

DN 250–400

Funke ILA (Internal Backdrop)

DN/OD 160 up to 400
for concrete chambers DN 1000, 1200 and 1500

Fabekun Junction ILA

for Internal Backdrop
DN 160

D-Raintank®

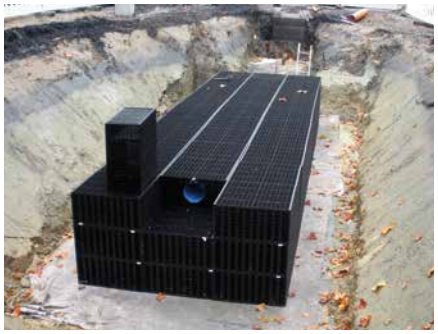

Rainwater attenuation and soakaway system.

D-Rainclean® Runoff Treatment

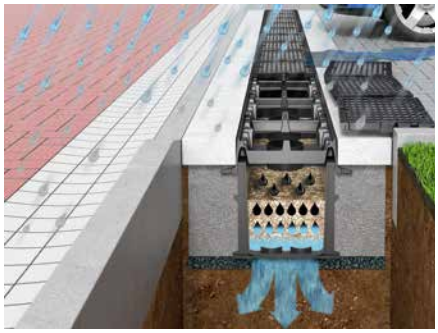

Combination of filtration channel and a filter media– professional solution for handling polluted surface water runoff.

INNOLET®

A retrofit kit for road gullies to treat polluted surface water runoff.

Funke Filter Chamber

Treatment of polluted surface water runoff before this is released to groundwater (percolation) or surface/ receiving waters (rivers, lakes etc.).

The HS®-Pipe System

Benefits

- long service life
- more than 80 years of experience with PVC-U material
- no corrosion
- high pressure jetting resistant (WRc and IRO tested)
- 100 % recyclable
- annular rigidity ≥ 12 kN/m²/ ≥ 16 kN/m²
- high strength pipes and fittings
- tight up to 2.5 bar test pressure (hydrostatic)
- low installation cost
- pH-range from 2 to 12
- high chemical resistance
- firmly inserted, oil-resistant FE®-Seal
- nominal diameters ranging from DN/OD 110 to DN/OD 800
- complete drainage fittings range including numerous accessories
- installation possible up to -10° C ❄
- installation depth from 0.5 to 6 m/SLW 60, HA Loading, H 20-44
- overall length 0.5 to 5 m
- special fittings available upon request
- flexible connections using the HS®-VARIO Socket
- subsequent embedding of pipelines with CONNEX junction is possible
- various manholes for various fields of application
- root-proof and root-tight
- perfect hydraulics

Further information

If you wish to know more about the HS®-range, please ask for information on the following points:

- HS®-Manholes
- HS®-Demarcation Chamber
- HS®-VARIO Socket
- HS®-Access Pipe
- HS®-Pipe Cutting and Chamfering Machine
- HS®-Tree Root Vent
- List of chemical resistances

Provision of services

- Texts for invitations to tender
- Pipe statics/object questionnaire
- Planning support during the planning and construction phase

Funke Kunststoffe GmbH
Germany
Tel.: +49 2388 3071-0
info@funkegruppe.de
www.funkegruppe.com

MJ Abbott Limited
Bratch Lane · Dinton · Salisbury
Wiltshire · SP3 5EB UK
Phone 01722 716361 · Fax 01722 716828
enquiries@mjabbott.co.uk · www.mjabbott.co.uk