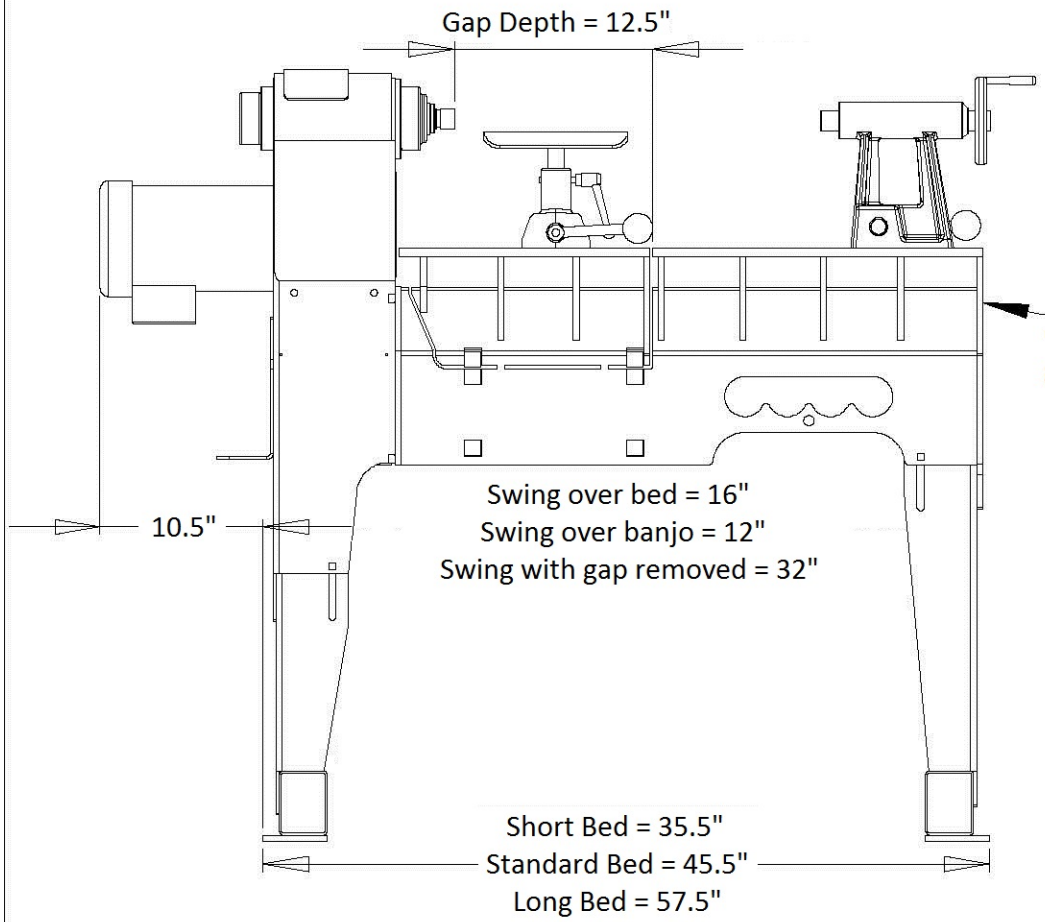


Center Distances:

Short Bed = 14"
Standard Bed = 24"
Long Bed = 36"

**NOTE**: Add 14" when using gap as extension

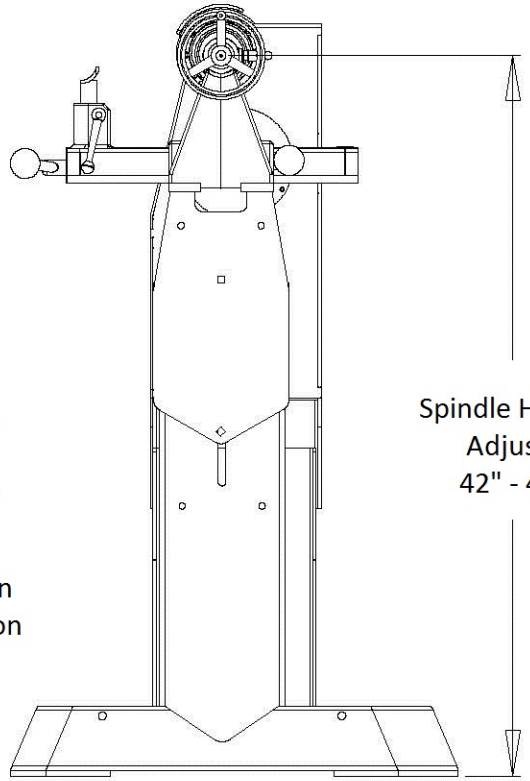


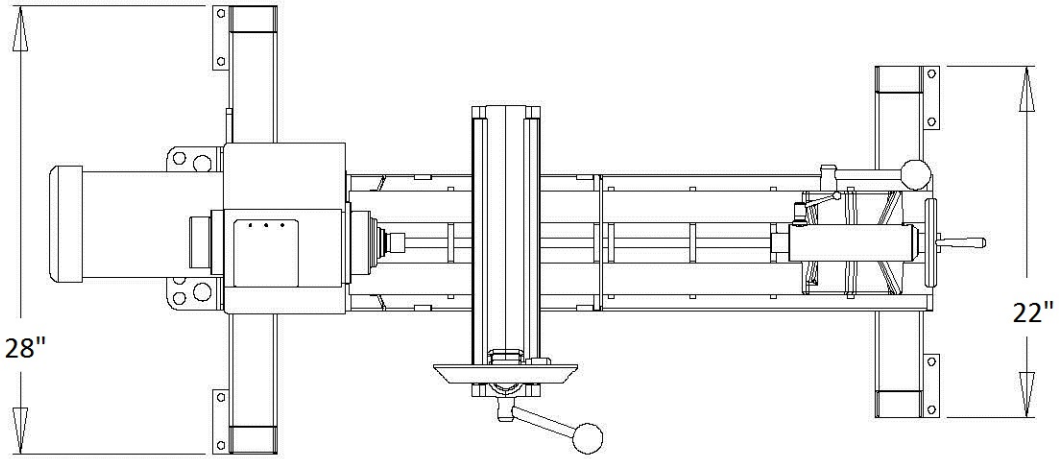


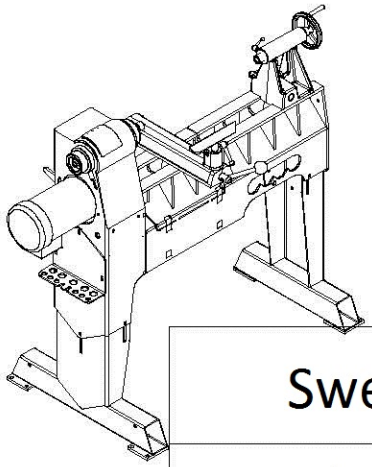

# Sweet Sixteen

Robust Woodturning Tools
www.turnrobust.com