DAIWA

BAITCASTING REEL

Please order by parts number, not key number
Veuillez indiquer le numéro de la pièce (Non "Key" No.)

TATULA SV 103H/103HS/103XS

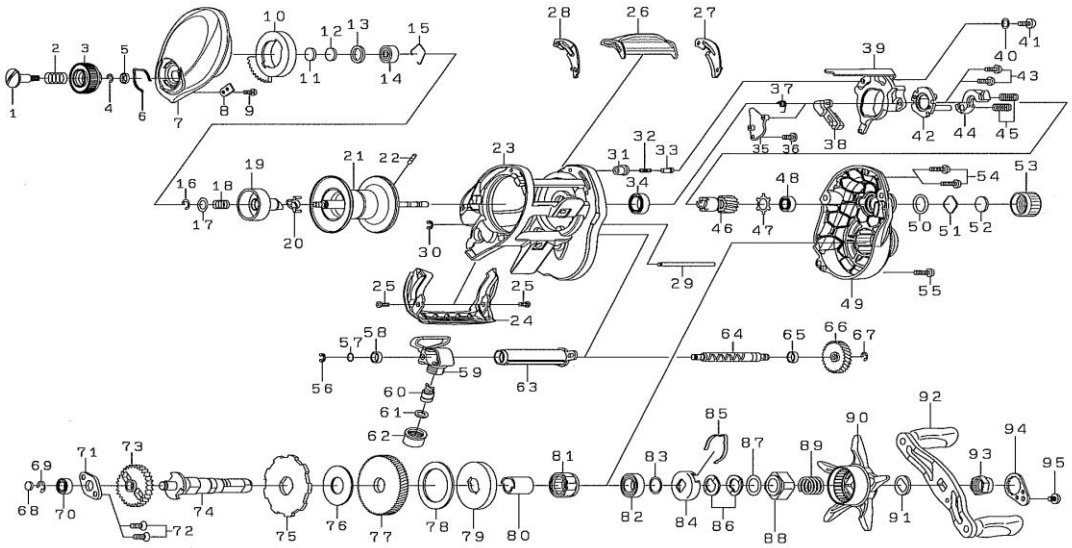

Key No.	Part No.	Part Name
1	H93-0401	SET PLT SCREW
2	E16-7101	SPRING
3	H93-0211	BRAKE ADJ KNOB
4	B33-9801	RETAINER
5	F63-7701	BRAKE DIAL WASHER
6	H66-3401	BRAKE CLICK SPRING
7	H93-0126	LEFT SIDE PLATE
8	H91-5501	BRAKE DIAL RET
9	G93-9301	FRONT PLATE SCREW
10	H93-0501	MAGNET HOLDER
11	375-7400	SPACER
12	375-7411	SPACER B
13	G18-5101	SPACER C
14	G51-1506	BALL BEARING
15	F03-2201	BEARING RETAINER
16-22	Z02-3334	SPOOL ASSEMBLY
23	J33-7908	FRAME
24	J24-4009	FRONT PLATE
25	H84-2803	SCREW
26	J24-2901	CLUTCH LEVER
27	H91-5601	CLUTCH LEVER PLT
28	H91-5701	CLUTCH LEVER PLT
29	J24-4101	STABILIZER BAR
30	H70-4101	RETAINER
31	H91-0601	COLLAR
32	H92-8801	SPRING B
33	J05-5201	PIN
34	B86-1704	BALL BEARING
35	J24-2801	PLATE A
36	H29-4101	SCREW
37	J24-3201	CLUTCH CAM SPRING
38	J22-1401	CLUTCH TRIP LEVER
39	J24-2601	CLUTCH CAM PLT
40	H15-9201	WASHER
41	352-2501	SCREW
42	H65-9101	CLUTCH CAM PLT
43	B03-2904	SCREW
44	H92-9001	YOKE
45	H58-2001	YOKE SPRING
46	H91-3901	PINION GEAR
47	H18-0501	BEARING RETAINER
48	G43-1104	BALL BEARING
49	J21-2132	RIGHT SIDE PLATE
50	B05-5201	O'RING
51	J21-3101	SPACER
52	B17-5503	CAP RUBBER WASHER
53	J47-2301	CAST CONTROL CAP
54	G04-0814	SIDE PLATE SCREW
55	G04-0801	SCREW
56	320-5901	RETAINER
57	B41-1700	WASHER
58	G72-0001	WORM SHAFT BEARING
59	J24-3303	T-WING
60	121-4212	LINE GUIDE PAWL
61	373-1300	WASHER
62	F40-2801	PAWL CAP
63	J24-3701	LEVEL WIND GUARD
64	J24-3601	WORM SHAFT
65	G72-0001	WORM SHAFT BEARING
66	H91-0501	WORM GEAR
67	B33-9801	RETAINER
68	G09-9800	WASHER
69	320-8002	RETAINER
70	B35-8607	CLUTCH SPRING
71	H92-8901	PLATE
72	E13-4509	SCREW
73	H91-2701	DRIVE SHAFT GEAR
74	J34-2201	DRIVE SHAFT
75	H92-9401	A/R RATCHET
76	J08-5101	DRIVE SHAFT WASHER
77	H91-3102	DRIVE GEAR
78	H45-2602	DRAG WASHER
79	H91-3201	KEY WASHER
80	J37-7801	GEAR SHAFT COLLAR
81	G81-9801	ROLLER CLUTCH
82	B86-1704	BALL BEARING
83	B55-3801	WASHER
84	F02-8203	CLICK LEAF SPRING HOLDER
85	F03-2401	BRAKE CLICK SPRING
86	150-8901	SPRING WASHER
87	H92-9501	WASHER
88	J14-1001	NUT
89	J01-1901	SPRING
90	J14-0001	STAR DRAG
91	F57-6601	HANDLE COLLAR
92	J14-2801	HANDLE ASSEMBLY
93	G79-3301	HANDLE NUT
94	H83-4505	HANDLE NUT PLATE
95	353-8301	HANDLE NUT PLT SCREW

TASV103HS SPECIAL PARTS

Key No.	Part No.	Part Name
3	H93-0208	BRAKE ADJ KNOB
46	J00-4201	PINION GEAR
49	J21-2133	RIGHT SIDE PLATE
53	J47-2302	CAST CONTROL CAP
77	J00-4002	DRIVE GEAR
94	H83-4504	HANDLE NUT PLATE

TASV103XS SPECIAL PARTS

Key No.	Part No.	Part Name
3	H93-0212	BRAKE ADJ KNOB
46	J00-9801	PINION GEAR
49	J21-2134	RIGHT SIDE PLATE
53	J47-2303	CAST CONTROL CAP
77	J00-9902	DRIVE GEAR
94	H83-4506	HANDLE NUT PLATE