DAIWA

SPINNING REEL

SALTIGAG8000H/10000H/14000XH

*Please order by parts number, not key number.

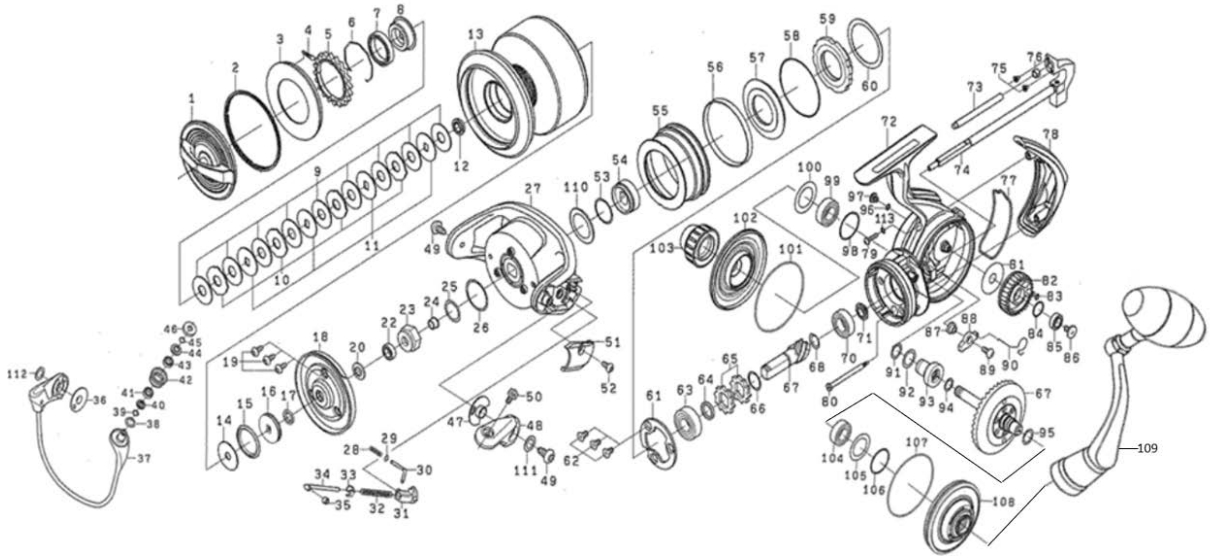

Key No	Part No	Description
1	J90-0501	DRAG KNOB
2	M04-2301	CLICK GEAR PLATE RING
3	J90-0301	CLICK GEAR PLATE
4	J91-6501	CLICK GEAR PIN
5	J90-0201	CLICK GEAR
6	J89-9901	SPOOL BALLBEARING(A)RING
7	J89-9801	SPOOL BALLBEARING(A)
8	J89-9701	SPOOL BALLBEARING(A) COLLAR
9	J89-9401	DRAG WASHER
10	J89-9601	DRAG LIP WASHER
11	J89-9501	DRAG DISC WASHER
12	J89-9301	SPOOL BALLBEARING(B)
13-Feb	J96-5301	SPOOL ASSY
14	J89-8600	SPOOL WASHER
15	J89-8501	SPOOL PLATE PACKING(A)
16	J89-8301	SPOOL PLATE
17	J89-8401	SPOOL PLATE PACKING(B)
18	J89-8201	ROTOR COVER
19	H40-1201	ROTOR COVER SCREW
20	J89-8101	ROTOR NUT PACKING
21	G52-2103	ROTOR NUT BALLBEARING WASHER
22	G46-7102	ROTOR NUT BALLBEARING
23	H50-4801	ROTOR NUT
24	J89-8001	ROTOR NUT COLLAR
25	J91-6401	ROTOR NUT WASHER
26	H50-1001	ROTOR NUT"O"RING
27	J89-6201	ROTOR
28	J89-6401	ROTOR BRAKE SPRING
29	J91-9501	ROTOR BRAKE WASHER
30	J89-6301	ROTOR BRAKE SHAFT
31	J32-2001	ARM LEVER SPRING COLLAR
32	J32-1901	ARM LEVER SPRING
33	J91-6001	ARM LEVER SHAFT PLATE
34	J32-1701	ARM LEVER SHAFT
35	J91-6101	ARM LEVER SHAFT COLLAR
36	J89-7401	BAIL HOLDER PLATE
37	J89-6901	BAIL
38	E09-6501	ROLLLER WASHER
39	J91-6201	ROLLER MAG COLLAR"O"RING
40	J89-7501	ROLLER MAG COLLAR(A)
41	H73-8902	ROLLER BALLBEARING
42	J89-7801	LINE ROLLER
43	H73-8902	ROLLER BALLBEARING
44	J89-7901	ROLLER MAG COLLAR(B)
45	J91-6201	ROLLER MAG COLLAR"O"RING
46	J91-6301	ROLLER COLLAR
47	J89-6601	ARM LEVER PLATR
48	M03-0501	ARM LEVER
49	J89-6701	HOLDER SCREW
50	H50-4701	ROLLER SCREW
51	J89-6801	ARM LEVER COVER
52	H40-1201	ARM LEVER COVER SCREW
53	H25-5001	CLUCTH RING"O"RING
54	J89-6001	CLUCTH RING
55	J89-6101	INFINATE COVER
56	H62-9701	INFINATE COVER "O"RING
57	H53-5301	MAG SEALED PLATE
58	H50-2601	MAG SEALED PLATE"O"RING
59	F76-5401	ONEWAY CLUCTH
60	G15-8101	ONEWAY CLUTCH WASHER
61	J89-5801	PINION BEARING(A) PLATE
62	F20-6902	PINION BEARING(A) PLATE SCREW

Key No	Part No	Description
63	635-5001	PINION BEARING(A)
64	J89-5701	PINION BEARING(A) COLLAR
65	E26-2701	RATCHET
66	372-7610	RATCHET WASHER
67	Z02-5448	PINION + DRIVE GEAR SET
68	G57-8501	PINION BEARING(B) SP WASHER
69	H41-1402	PINION BEARING(B) WASHER
70	H73-9703	PINION BEARING(B)
71	J89-5101	PINION BEARING(B) COLLAR
72	J89-3108	BODY
73	J89-4601	OSCILLATING POST
74-76	J89-4201	MAIN SHAFT
75	H84-2802	OSCILLATING POST COLLAR SCREW
76	J89-4401	OSCILLATING POST COLLAR
77	J89-4701	REAR CAP PACKING
78	J89-4801	REAR CAP
79	J89-4901	REAR CAP SCREW(A)
80	J89-5001	REAR CAP SCREW(B)
81	J89-3601	OSCILLATING GEAR WASHER
82	J89-3701	OSCILLATING GEAR
83	J03-7601	OSCILLATING GEAR"O"-RING
84	G52-2103	OSCILLATING GEAR BEARING WASHER
85	G46-7102	OSCILLATING GEAR BALL BEARING
86	H27-2202	OSCILLATING GEAR SCREW
87	H24-3301	STOPPER COLAAR
88	M03-0301	STOPPER
89	351-6401	STOPPER SCREW
90	J89-5601	STOPPER SPRING
91	G16-3201	IDLE GEAR"O"RING (A)
92	171-5202	IDLE GEAR"O"RING (B)
93	J89-3801	IDLE GEAR
94	J18-5801	IDLE GEAR"O"RING (C)
95	G16-3201	DRIVE GEAR"O"RING
96	B85-3101	DRIVE BEARING(A) COVER PIN"O"RING
97	J90-2801	DRIVE BEARING(A) COVER PIN
98	J04-2501	DRIVE BEARING(A)"O"RING
99	J04-2402	DRIVE BEARING(A)
100	J89-3901	DRIVE BEARING(A)WASHER
101	J89-4101	DRIVE BEARING(A) COVER"O"RING
102	J89-4001	DRIVE BEARING(A) COVER
103	J90-2002	HANDLE CAP
104	J04-2402	DRIVE BEARING(B)
105	G52-9503	DRIVE BEARING(B)WASHER
106	J04-2501	DRIVE BEARING(B)"O"RING
107	J89-4101	ENGINEPLATE "O"RING
108	J89-5905	ENGINEPLATE
109	M01-8801	HANDLE
111	M05-0901	HOLDER SCREW WASHER
112	M05-0901	HOLDER SCREW WASHER
113	E27-2501	REAR CAP SCREW(A)WASHER

SALTIGAG1000H Special Parte

Key No	Part No	Description
13-Feb	J96-6401	SPOOL ASSY
72	J89-3109	BODY

SALTIGAG1400XH Special Parte

Key No	Part No	Description
44605	J89-8701	SPOOL ASSY
67	Z02-5446	PINION + DRIVE GEAR SET
72	J89-3107	BODY
108	J89-5904	ENGINE PLATE