DAIWA

BAITCASTING REEL

Please order by parts number, not key number
*Veuillez indiquer le numéro de la pièce (Non "Key" No.)*

# EXCELER 100HA/100HSA/100PA

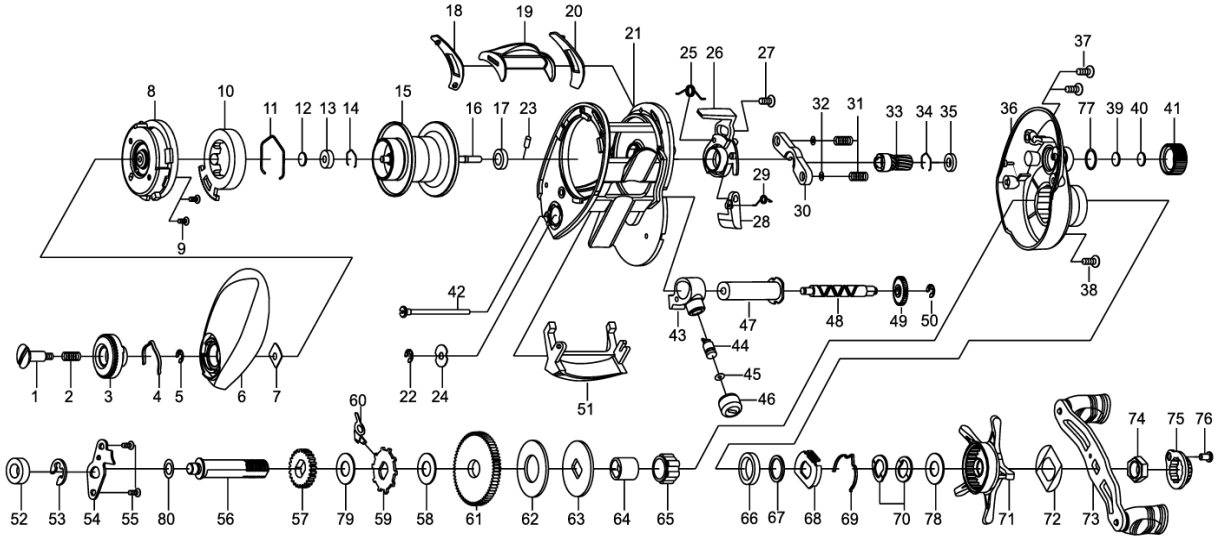


| Key No. | Part No. | Part Name |
|---|---|---|
| 1 | 460-5410 | SET PLATE SCREW |
| 2 | 510-4450 | SET PLATE SPRING |
| 3 | 550-1610 | BRAKE ADJ KNOB |
| 4 | 510-5180 | BRAKE CLICK SPRING |
| 5 | 200-0530 | BRAKE DIAL RET |
| 6 | 230-2275 | LEFT SIDE PLATE |
| 7 | 410-1911 | BRAKE DIAL RET |
| 8 | 220-3030 | SET PLATE |
| 9 | 460-3220 | SCREW |
| 10 | 240-1952 | MAGNET HOLDER |
| 11 | 430-1070 | MAGNET HOLDER RET |
| 12 | 540-5990 | SPACER A |
| 13 | 140-1650 | BALL BEARING |
| 14 | 430-1061 | BEARING RET |
| 15-17 | 700-9570 | SPOOL |
| 18 | 410-2150 | SPACER B |
| 19 | 090-0260 | CLUTCH LEVER |
| 20 | 410-2140 | SPACER C |
| 21 | 110-1100 | FRAME |
| 22 | 200-0530 | BRAKE DIAL RET |
| 23 | 400-2250 | SPOOL PIN |
| 24 | 540-6060 | WORM SHAFT WASHER |
| 25 | 510-5040 | CLUTCH CAM SPRING |
| 26 | 170-1280 | CLUTCH CAM |
| 27 | 460-1290 | SCREW |
| 28 | 330-2820 | CLUTCH TRIM PLATE |
| 29 | 510-5050 | CLUTCH TRIM PLT SPRING |
| 30 | 410-1890 | YOKE |
| 31 | 510-4770 | YOKE SPRING |
| 32 | 540-6020 | WASHER |
| 33 | 260-1691 | PINION GEAR |
| 34 | 430-1061 | BEARING RET |
| 35 | 140-1280 | BALL BEARING |
| 36 | 230-2490 | RIGHT SIDE PLATE |
| 37 | 460-7010 | SCREW |
| 38 | 460-5520 | SCREW |
| 39 | 540-6850 | SPACER D |
| 40 | 540-4340 | SPACER E |
| 41 | 380-1790 | CAST CONTROL CAP |
| 42 | 460-5170 | LONG SCREW |
| 43 | 490-1080 | LINE GUIDE |
| 44 | 400-2540 | LINE GUIDE NUT |
| 45 | 540-3980 | OSC PAWL WASHER |
| 46 | 380-0780 | LINE PAWL CAP |
| 47 | 270-0720 | LEVEL WIND GUARD |
| 48 | 470-1920 | WORM SHAFT |
| 49 | 240-2180 | WORM SHAFT GEAR |
| 50 | 200-0530 | BRAKE DIAL RET |
| 51 | 550-1651 | FRONT PLATE |
| 52 | 140-1280 | BALL BEARING |
| 53 | 200-0580 | DRIVE GEAR SHAFT RET |
| 54 | 410-2211 | DRIVE SHAFT RET |
| 55 | 460-4640 | SCREW |
| 56 | 470-3081 | DRIVE SHAFT |
| 57 | 240-2190 | DRIVE GEAR A |
| 58 | 540-6840 | DRIVE SHAFT WASHER |
| 59 | 240-2530 | A/R RATCHET |
| 60 | 530-0840 | A/R PAWL |
| 61 | 250-1400 | DRIVE GEAR |
| 62 | 540-6950 | DRAG WASHER |
| 63 | 540-9030 | KEY WASHER |
| 64 | 150-2190 | GEAR SHAFT COLLAR |
| 65 | 140-1810 | ROLLER CLUTCH |
| 66 | 140-0570 | BALL BEARING |
| 67 | 540-6250 | SPACING WASHER |
| 68 | 410-2220 | CLICK LEAF SPRING HOLDER |
| 69 | 510-4760 | LEAF SPRING A |
| 70 | 540-6390 | DRAG SPRING WASHER |
| 71 | 320-1230 | STAR DRAG |
| 72 | 510-3260 | LEAF SPRING B |
| 73 | 700-8670 | HANDLE ASSEMBLY |
| 74 | 380-0770 | HANDLE NUT |
| 75 | 180-2470 | HANDLE NUT PLATE |
| 76 | 460-0440 | SCREW |
| 77 | 430-1080 | O-RING |
| 78 | 540-9020 | WASHER |
| 79 | 540-7010 | WASHER |
| 80 | 540-6600 | WASHER |

**EXCELER 100HSA**

| Key No. | Part No. | Part Name |
|---|---|---|
| 15-17 | 700-9571 | SPOOL |
| 33 | 260-1830 | PINION GEAR |
| 36 | 230-2491 | RIGHT SIDE PLATE |
| 61 | 250-1460 | DRIVE GEAR |

**EXCELER 100PA**

| Key No. | Part No. | Part Name |
|---|---|---|
| 15-17 | 700-9572 | SPOOL |
| 33 | 260-1721 | PINION GEAR |
| 36 | 230-2492 | RIGHT SIDE PLATE |
| 61 | 250-1420 | DRIVE GEAR |
| 62 | 540-7300 | DRAG WASHER |
| 63 | 540-9050 | KEY WASHER |