ARITA

MINI-DIAMETER STAINLESS STEEL VALVE

UNIMECH

SINCE 1977

FEMALE THREADED BALL VALVE

1000 Psi

3PC Female Threaded Ball Valve (WCB,CF8,CF8M)

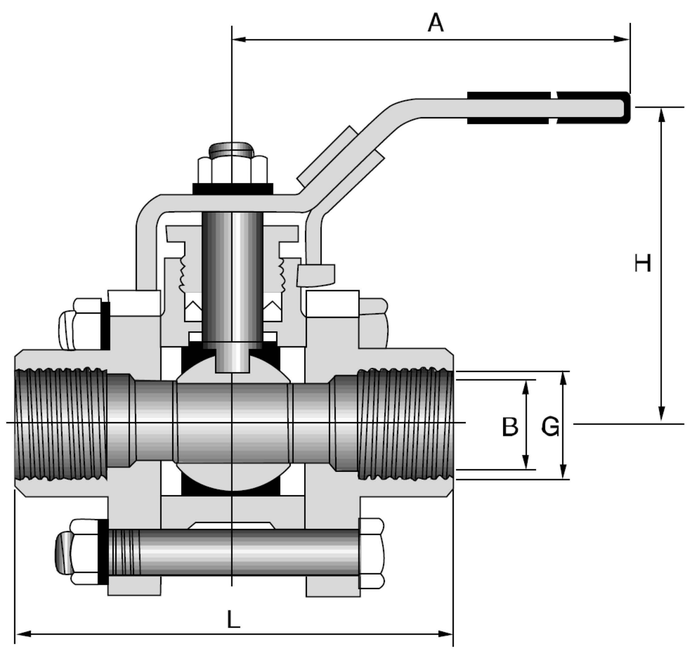

Dimensions

DN	G	B	L	H	A
6	1/4"	8	65	57	98
10	3/8"	10	65	57	98
15	1/2"	15	73	68	125
20	3/4"	20	86	70	125
25	1"	25	91	80	145
32	11/4"	32	113	84	145
40	11/2"	38	121	93	205
50	2"	50	142	100	205
65	21/2"	64	174	142	250
80	3"	76	193	155	250
100	4"	100	216	172	300

Materials

Parts	Materials		
Body	WCB	CF8	CF8M
Ball	SS 304	SS 304	SS 316
Stem	SS 304	SS 304	SS 316
Seat	PTFE		
Packing	PTFE		

3PC Welded Ball Valve (WCB,CF8,CF8M)

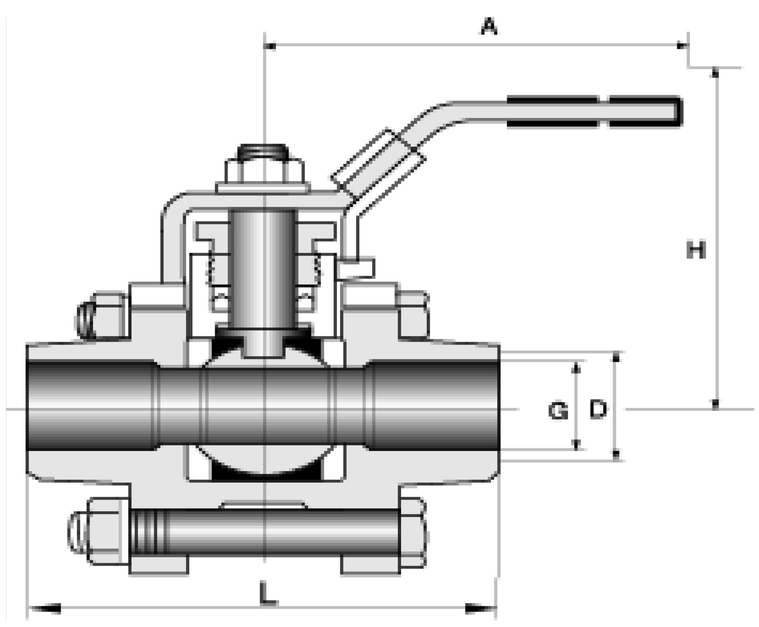

Dimensions

DN	G	L	H	A
6	1/4"	65	52	105
10	3/8"	65	52	105
15	1/2"	75	65	130
20	3/4"	85	70	130
25	1"	95	78	150
32	11/4"	115	82	180
40	11/2"	125	90	200
50	2"	150	98	200
65	21/2"	175	140	240
80	3"	210	135	265
100	4"	250	155	300

Materials

Parts	Materials		
Body	WCB	CF8	CF8M
Ball	SS 304	SS 304	SS 316
Stem	SS 304	SS 304	SS 316
Seat	PTFE		
Packing	PTFE		

FEMALE THREADED BALL VALVE

1000 Psi

3PC Female Threaded Ball Valve (WCB,CF8,CF8M)

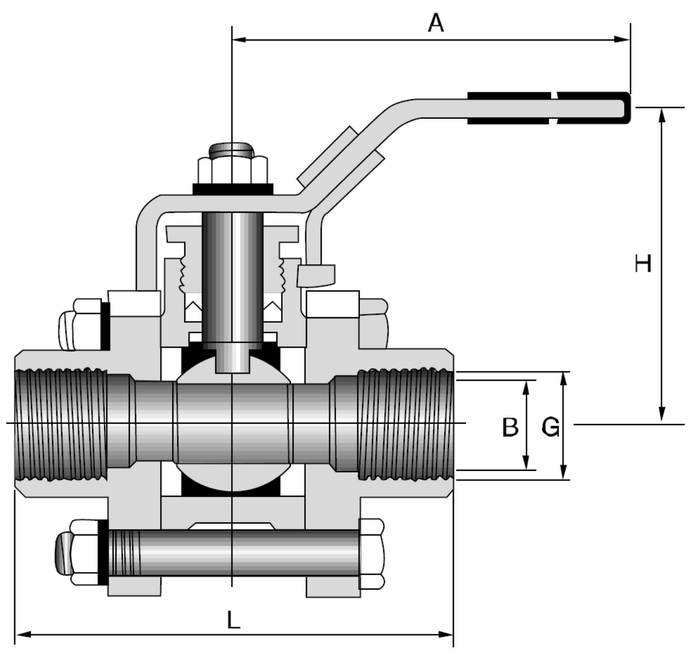

Dimensions

DN	G	B	L	H	A
6	1/4"	8	65	57	98
10	3/8"	10	65	57	98
15	1/2"	15	73	68	125
20	3/4"	20	86	70	125
25	1"	25	91	80	145
32	11/4"	32	113	84	145
40	11/2"	38	121	93	205
50	2"	50	142	100	205
65	21/2"	64	174	142	250
80	3"	76	193	155	250
100	4"	100	216	172	300

Materials

Parts	Materials		
Body	WCB	CF8	CF8M
Ball	SS 304	SS 304	SS 316
Stem	SS 304	SS 304	SS 316
Seat	PTFE		
Packing	PTFE		

3PC Welded Ball Valve (WCB,CF8,CF8M)

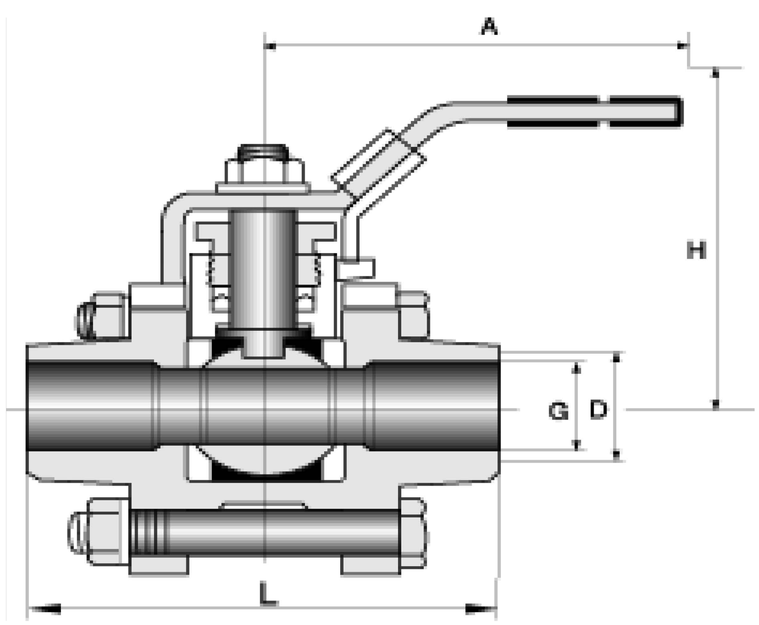

Dimensions

DN	G	L	H	A
6	1/4"	65	52	105
10	3/8"	65	52	105
15	1/2"	75	65	130
20	3/4"	85	70	130
25	1"	95	78	150
32	11/4"	115	82	180
40	11/2"	125	90	200
50	2"	150	98	200
65	21/2"	175	140	240
80	3"	210	135	265
100	4"	250	155	300

Materials

Parts	Materials		
Body	WCB	CF8	CF8M
Ball	SS 304	SS 304	SS 316
Stem	SS 304	SS 304	SS 316
Seat	PTFE		
Packing	PTFE		

FEMALE THREADED BALL VALVE

1000 Psi

Female Threaded Tee Ball Valve (WCB,CF8,CF8M)

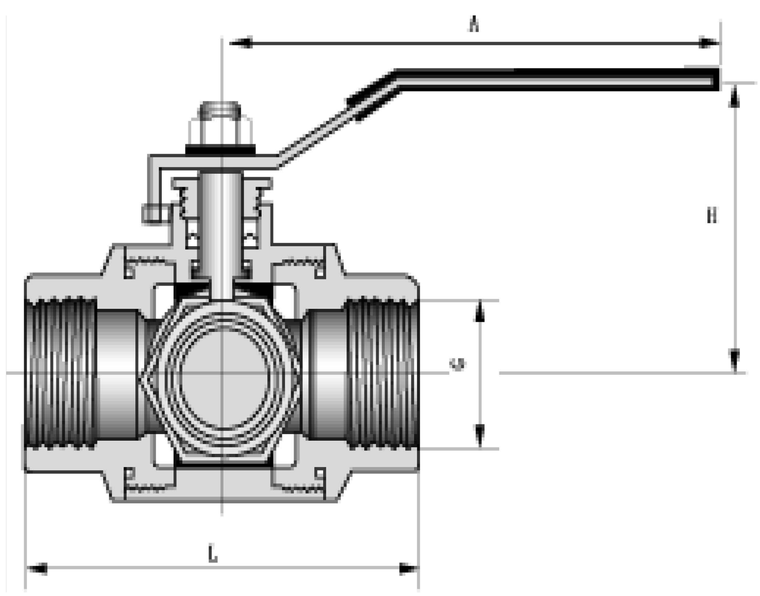

Dimensions

DN	G	L	E	A	H
6	1/4"	60	16	95	59
10	3/8"	60	16	95	59
15	1/2"	60	16	95	59
20	3/4"	75	18	125	63
25	1"	86	22	125	68
32	11/4"	105	25	145	73
40	11/2"	114	26	145	89
50	2"	140	28	205	100
65	21/2"				
80	3"				
100	4"				

Materials

Parts	Materials		
Body	WCB	CF8	CF8M
Ball	SS 304	SS 304	SS 316
Stem	SS 304	SS 304	SS 316
Seat	PTFE		
Packing	PTFE		

3PC Stainless Steel Pneumatic Ball Valve (304,316)

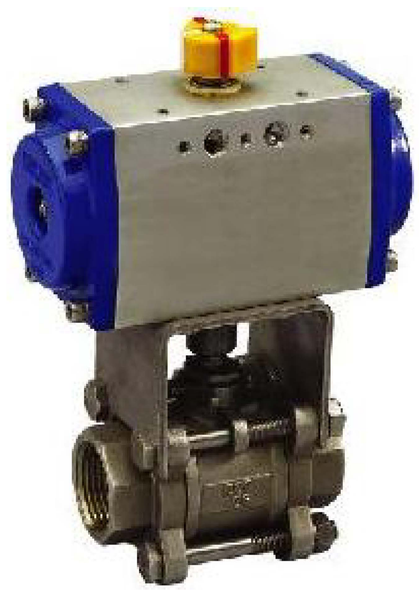

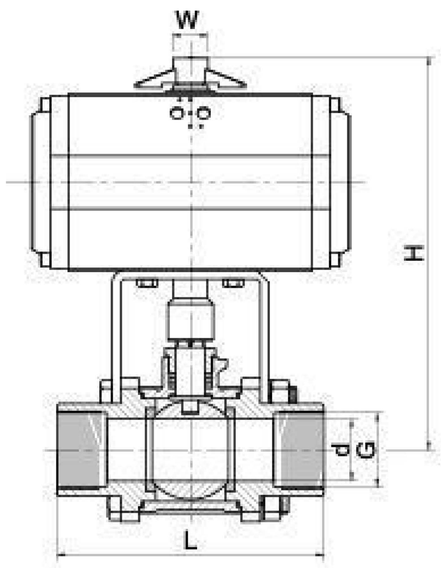

Dimensions

DN	G	B	L	H	A
6	1/4"	8	65	57	98
10	3/8"	10	65	57	98
15	1/2"	15	73	68	125
20	3/4"	20	86	70	125
25	1"	25	91	80	145
32	11/4"	32	113	84	145
40	11/2"	38	121	93	205
50	2"	50	142	100	205
65	21/2"	64	174	142	250
80	3"	76	193	155	250
100	4"	100	216	172	300

Materials

Parts	Materials		
Body	WCB	CF8	CF8M
Ball	SS 304	SS 304	SS 316
Stem	SS 304	SS 304	SS 316
Seat	PTFE		
Packing	PTFE		

FEMALE THREADED BALL VALVE

1000 Psi

Stainless Steel Female Threaded Gate Valve (CF8,CF8M)

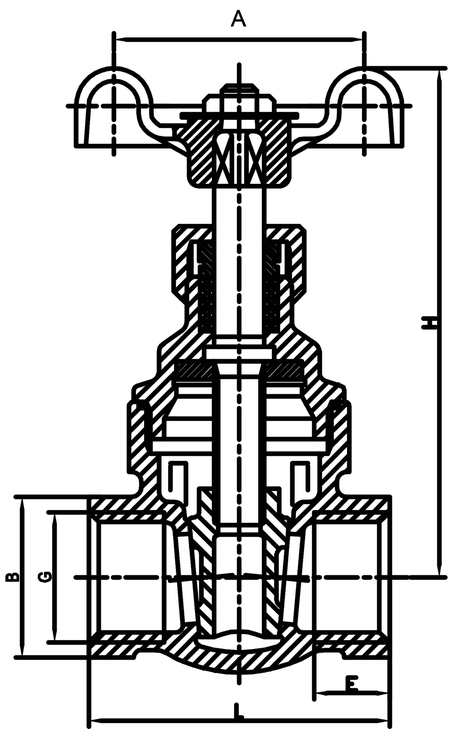

Dimensions

DN	G	L	E	B	H	A
6	1/4"	53	15	23	80	60
10	3/8"	55	15	26	80	60
15	1/2"	55	17	31	90	70
20	3/4"	60	18	38	98	70
25	1"	65	20	46	108	80
32	1 1/4"	75	21.5	56	120	90
40	1 1/2"	79	23	63	146	100
50	2"	90	24.5	76	162	120

Materials

Parts	Materials		
Body	WCB	CF8	CF8M
Disc	SS 304	SS 304	SS 316
Stem	SS 304	SS 304	SS 316
Sealring	304,316		
Packing	PTFE		

American Type Female Threaded Stop Valve (WCB,CF8,CF8M)

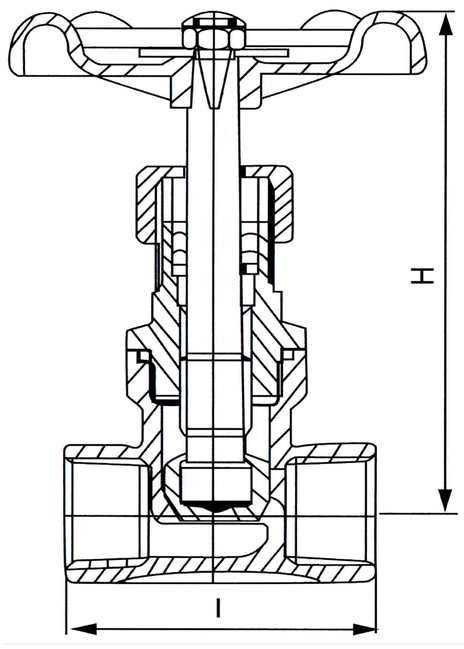

Dimensions

DN	G	L	E	B	H	A
6	1/4"	60	15	23	80	60
10	3/8"	60	15	26	80	60
15	1/2"	68	17	31	90	70
20	3/4"	82	18	38	98	70
25	1"	90	20	46	108	80
32	1 1/4"	105	21.5	56	120	80
40	1 1/2"	125	23	63	146	98
50	2"	140	24.5	76	162	100

Materials

Parts	Materials		
Body	WCB	CF8	CF8M
Disc	SS 304	SS 304	SS 316
Stem	SS 304	SS 304	SS 316
Sealring	304,316		
Packing	PTFE		

FEMALE THREADED BALL VALVE

1000 Psi

Stainless Steel Female Threaded Check Valve (CF8,CF8M)

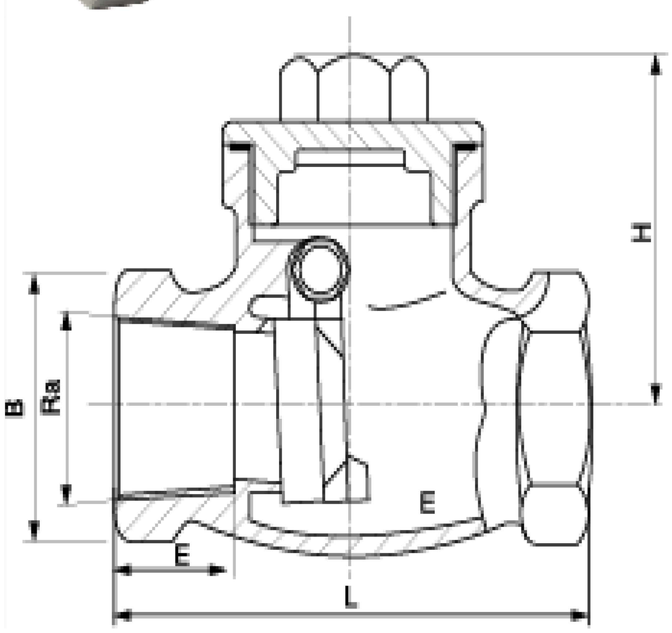

Dimensions

DN	G	L	E	B	H
6	1/4"	65	10	24	65
10	3/8"	65	10	24	65
15	1/2"	65	12	26	65
20	3/4"	80	17	32	80
25	1"	91	20	14	90
32	11/4"	104	20	51	105
40	11/2"	120	20	58	120
50	2"	140	23	69	140

Materials

Parts	Materials		
Body	WCB	CF8	CF8M
Bonnet	SS 304	SS 304	SS 316
Disc	SS 304	SS 304	SS 316
Seal ring	PTFE		
Packing	PTFE		

Female Threaded Y-Type filter (WCB,CF8,CF8M)

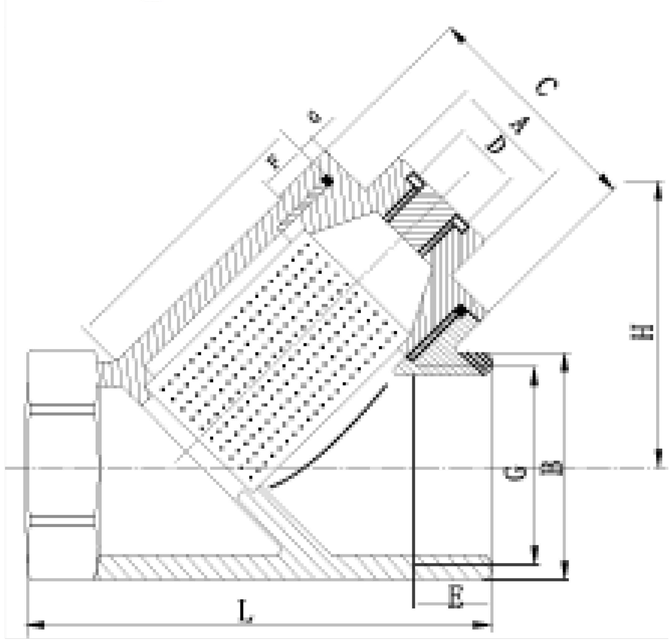

Dimensions

DN	G	L	E	B	H
6	1/4"	63.5	11.5	24	42
10	3/8"	64	13	24	42
15	1/2"	65	14	26	43
20	3/4"	80	15	32	50
25	1"	89	17	41	60
32	11/4"	107	20	49	64
40	11/2"	118	20	56	70
50	2"	140	22	69	88

Materials

Parts	Materials		
Body	WCB	CF8	CF8M
Bonnet	SS 304	SS 304	SS 316
Screen	SS 304	SS 304	SS 316
Packing	PTFE		

UNIMECH

UNIMECH GROUP BERHAD

Company No.:407580-X

Head Quarter:Unimech Group Berhad
Add: Wisma Unimech, 4934, Jalan Chain Ferry.
12100 Butterworth Penang, Malaysia.
Tel: 006-04-3328823
Fax: 006-04-3325491
URL: Http://www.aritavalve.net
E-mail:sales@aritavalve.net

Shanghai Office
Add:No.3-301 RJ Int'l Business Office Lane1
Kangshi Road Shanghai, P.R.C
Tel:0086-21-61181608 61181609 61181610
Fax:0086-21-61181606
URL:Http://www.aritavalve.net
E-mail:service@aritavalve.net