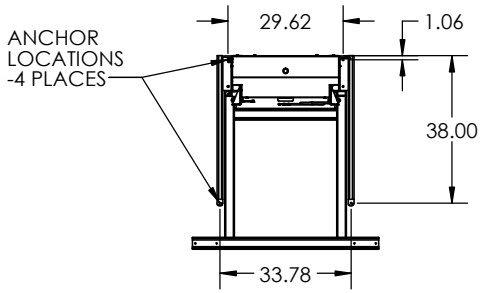

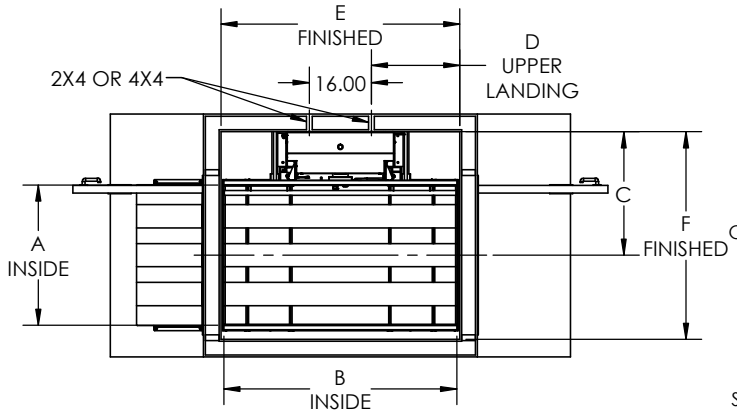

Specifications
Model: VP19
Rated Load: 750 lbs
Drive: Dual winding cable drums / 24 VDC
500 watt motor w/brake
Supply Power: 120 VAC 15A
Operating Power: 24 VDC (DUAL 12V 10AH BATTERIES)
Control Power: 5 VDC
Platform: 36" x 48" (36" x 54")(36" x 60")
(42" x 54")(42" x 60")
Lift Height: 1" - 144"
Speed: 15-18 fpm
Controls: Constant pressure
Safety Standards: ASME A18.1, Section 2
CSA B44.1/ASME A17.5
Safety Features: Safety pan, final limit, slack cable brake, emergency stop w/alarm

DIMESNIONS AND SPECIFICATIONS SUBJECT TO CHANGE

DESIGNED TO COMPLY WITH ANSI A18.1 PART 2 WHEN PROPERLY INSTALLED

PLATFORM SIZE	A	B	C	D	E	F
36X48	36.25	48.00	31.81	16.75	49.50	53.50
36X54	36.25	54.00	31.81	16.75	55.50	53.50
36X60	36.25	60.00	31.81	22.75	61.50	53.50
42X54	42.25	54.00	34.81	16.75	55.50	59.50
42X60	42.25	60.00	34.81	22.75	61.50	59.50

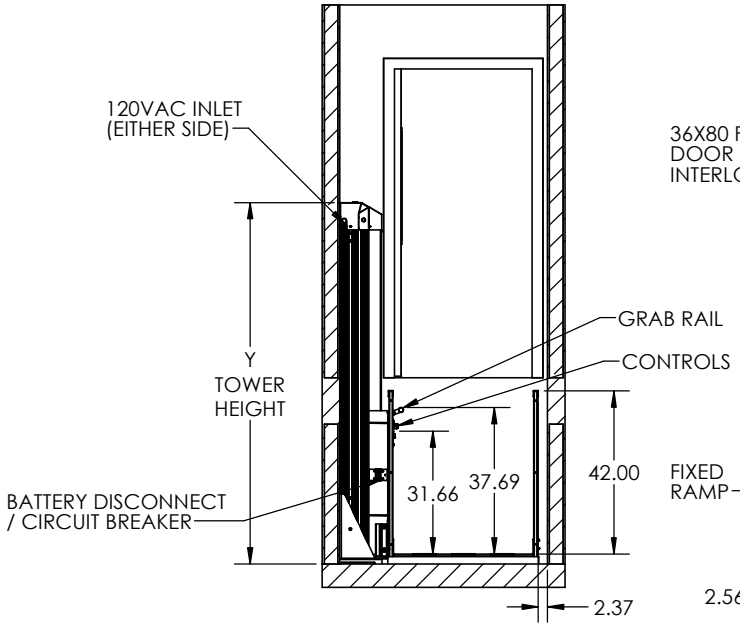

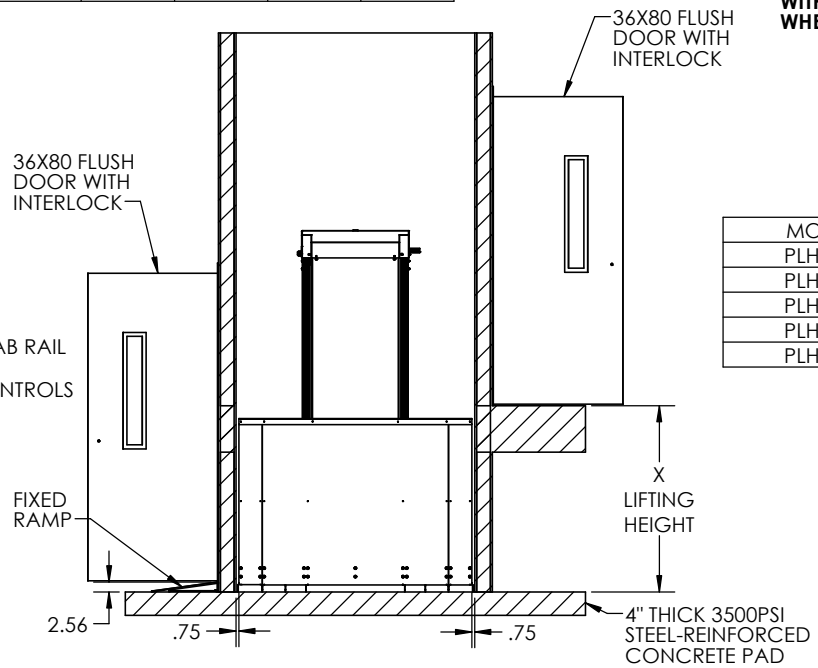

MODEL	X	Y
PLH-048	48	93.06
PLH-072	72	117.06
PLH-096	96	141.06
PLH-120	120	165.06
PLH-144	144	189.06

Staying Home Corporation
2501 Anaconda Rd
Harrisonville, MO 64701
816-380-2427
www.stayinghome.com

TITLE: PLATFORM LIFT - HOISTWAY STRAIGHT THRU

SIZE	DWG. NO.	REV
B	TYP-PLH-ST	05/09 2019

SCALE: WEIGHT: SHEET 1 OF 1