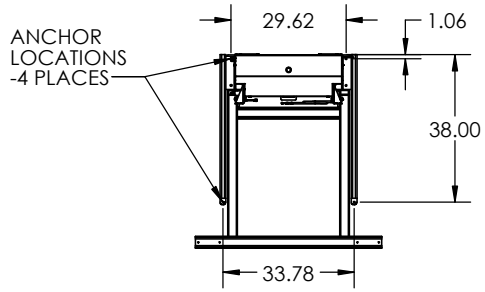


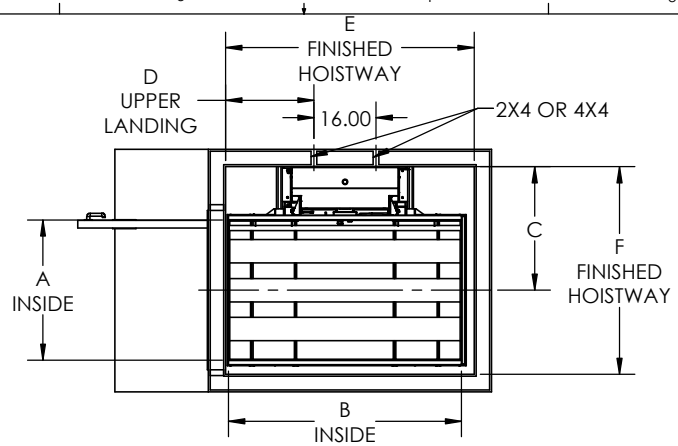


Specifications
Model: VP19
Rated Load: 750 lbs
Drive: Dual winding cable drums / 24 VDC 500 watt motor w/brake
Supply Power: 120 VAC 15A
Operating Power: 24 VDC (DUAL 12V 10AH BATTERIES)
Control Power: 5 VDC
Platform: 36" x 48" (36" x 54")(36" x 60") (42" X 54")(42" x 60")
Lift Height: 1" - 144"
Speed: 15-18 fpm
Controls: Constant pressure
Safety Standards: ASME A18.1, Section 2 CSA B44.1/ASME A17.5
Safety Features: Safety pan, final limit, slack cable brake, emergency stop w/alarm

DIMESNIONS AND SPECIFICATIONS SUBJECT TO CHANGE

**DESIGNED TO COMPLY WITH ANSI A18.1 PART 2 WHEN PROPERLY INSTALLED**

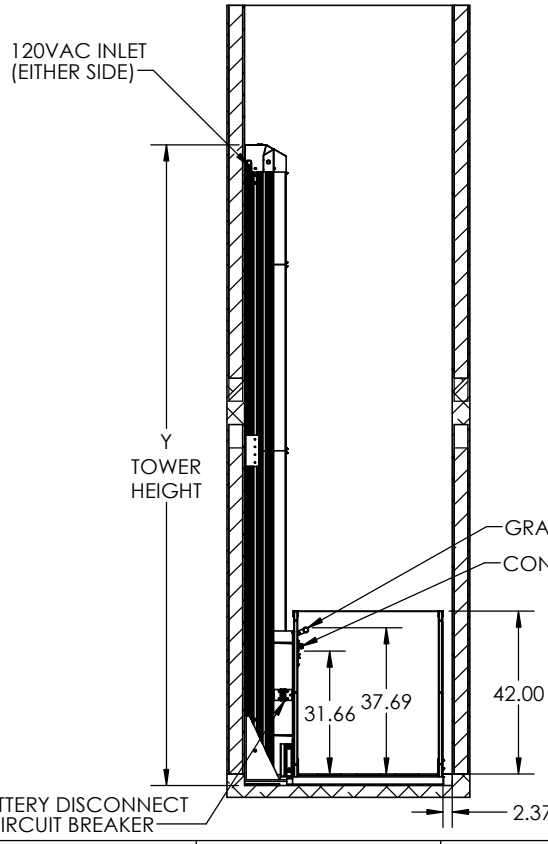


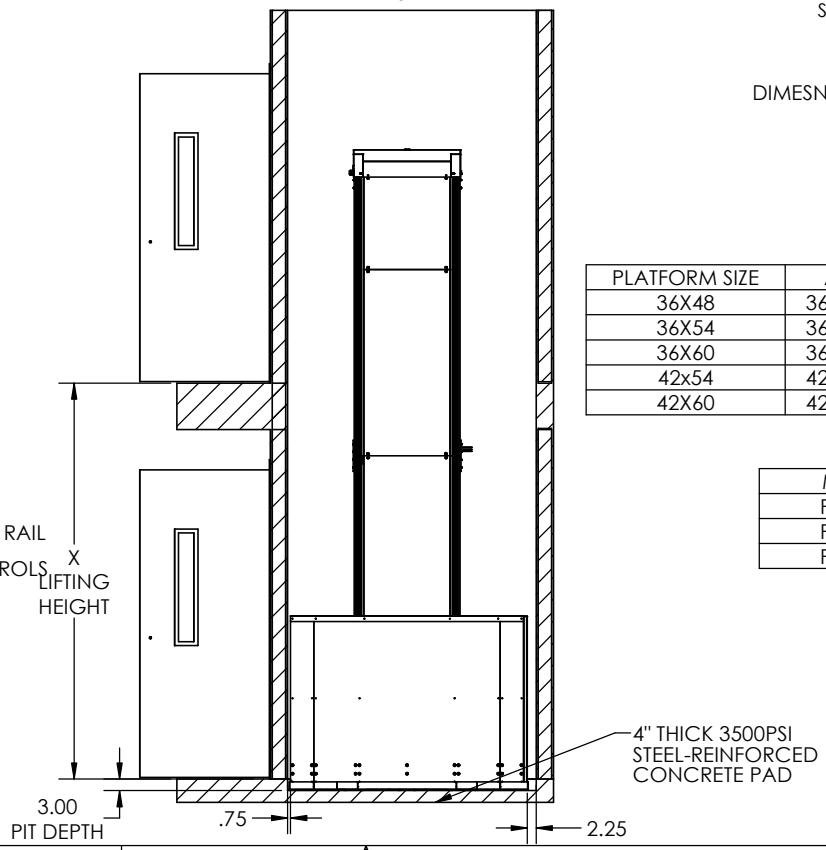


| PLATFORM SIZE | A | B | C | D | E | F |
|---|---|---|---|---|---|---|
| 36X48 | 36.25 | 48.00 | 31.81 | 16.75 | 52.00 | 53.50 |
| 36X54 | 36.25 | 54.00 | 31.81 | 16.75 | 58.00 | 53.50 |
| 36X60 | 36.25 | 60.00 | 31.81 | 22.75 | 64.00 | 53.50 |
| 42x54 | 42.25 | 54.00 | 34.81 | 16.75 | 58.00 | 59.50 |
| 42X60 | 42.25 | 60.00 | 34.81 | 22.75 | 64.00 | 59.50 |

| MODEL | X | Y |
|---|---|---|
| PLH-096 | 96 | 141.06 |
| PLH-120 | 120 | 165.06 |
| PLH-144 | 144 | 189.06 |

Staying Home Corporation
2501 Anaconda Rd
Harrisonville, MO 64701
816-380-2427
www.stayinghome.com

TITLE: PLATFORM LIFT - HOISTWAY ENTER/EXIT SAME SIDE PITTED

| SIZE | DWG. NO. | REV |
|---|---|---|
| B | TYP-PLH-EE P | 05/09 2019 |

SCALE: WEIGHT: SHEET 1 OF 1