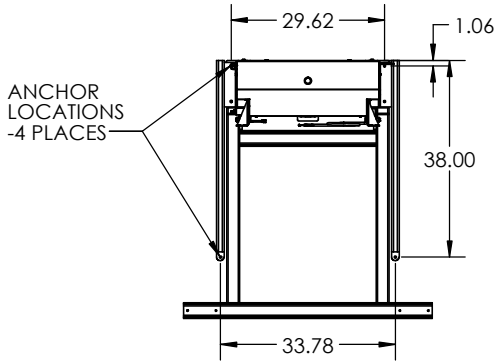

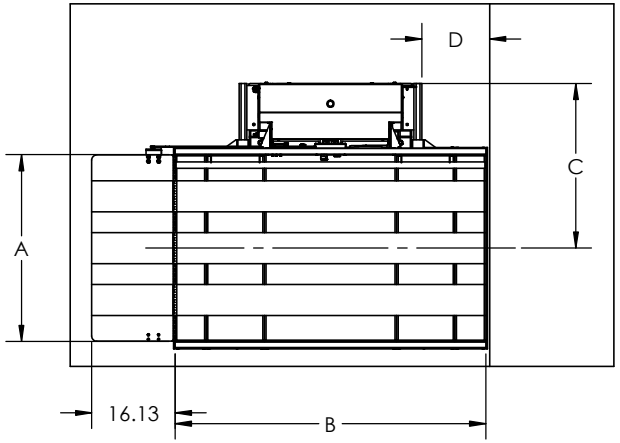

Specifications
Model: VP19
Rated Load: 750 lbs
Drive: Dual winding cable drums / 24 VDC
500 watt motor w/brake
Supply Power: 120 VAC 15A
Operating Power: 24 VDC (DUAL 12V 10AH BATTERIES)
Control Power: 5 VDC
Platform: 36" x 48" (36" x 54")(36" x 60")
(42" x 54")(42" x 60")
Lift Height: 1" - 144"
Speed: 15-18 fpm
Controls: Constant pressure paddle switch
Safety Standards: ASME A18.1, Section 2
CSA B44.1/ASME A17.5
Safety Features: Safety pan, final limit, slack cable brake, emergency stop w/alarm

DESIGNED TO COMPLY WITH ANSI A18.1 PART 2 WHEN PROPERLY INSTALLED

PLATFORM SIZE	A	B	C	D
36X48	36.25	48.00	31.81	7.13
36X54	36.25	54.00	31.81	7.13
36X60	36.25	60.00	31.81	13.13
42X54	42.25	54.00	34.81	7.13
42X60	42.25	60.00	34.81	13.13

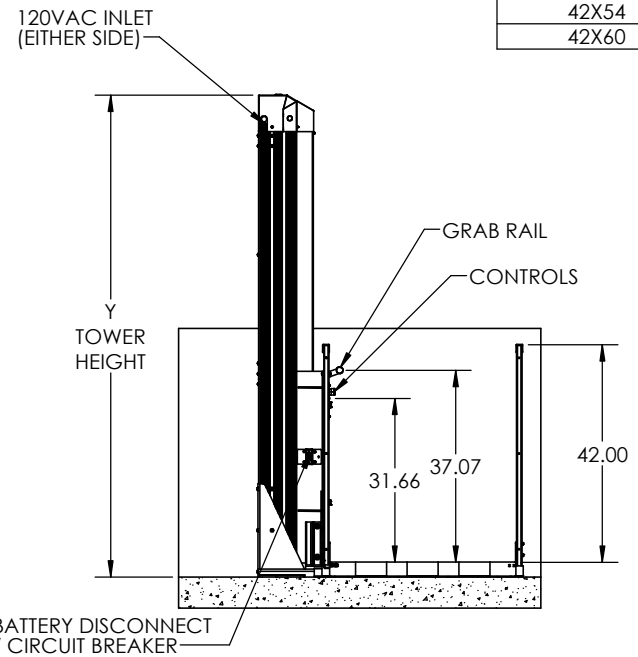

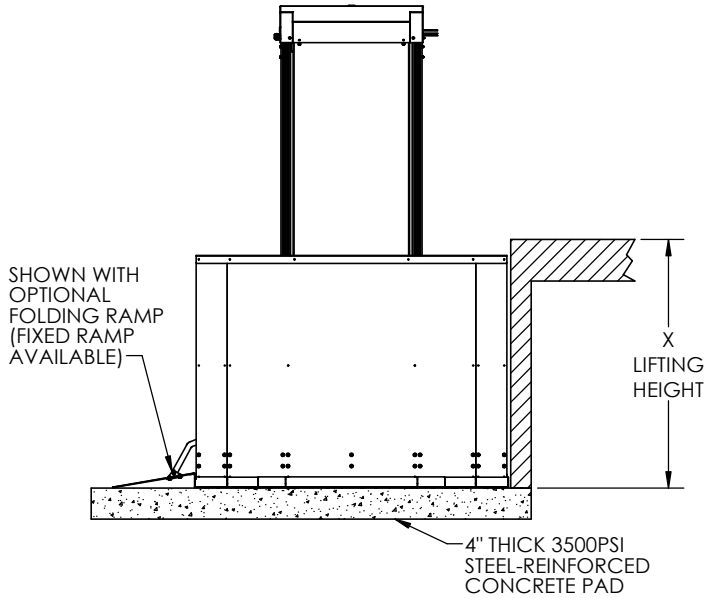

MODEL	X	Y
PLO-048	48	93.06
PLO-072	72	117.06
PLO-096	96	141.06
PLO-0120	120	165.06
PLO-0144	144	189.06

Staying Home Corporation
2501 Anaconda Rd
Harrisonville, MO 64701
816-380-2427
www.stayinghome.com

TITLE: PLATFORM LIFT - OPEN

SIZE	DWG. NO.	REV
B	TYP-PLO	05/09 2019

SCALE: WEIGHT: SHEET 1 OF 1