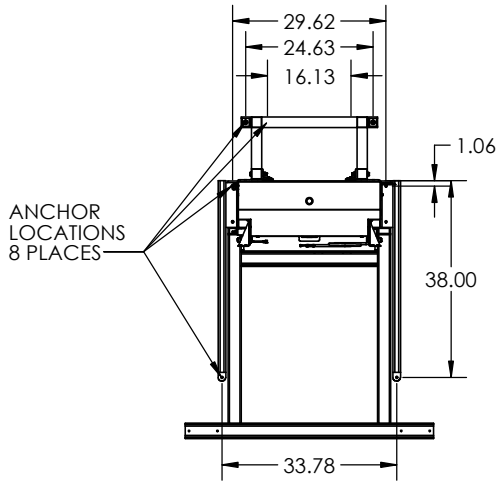


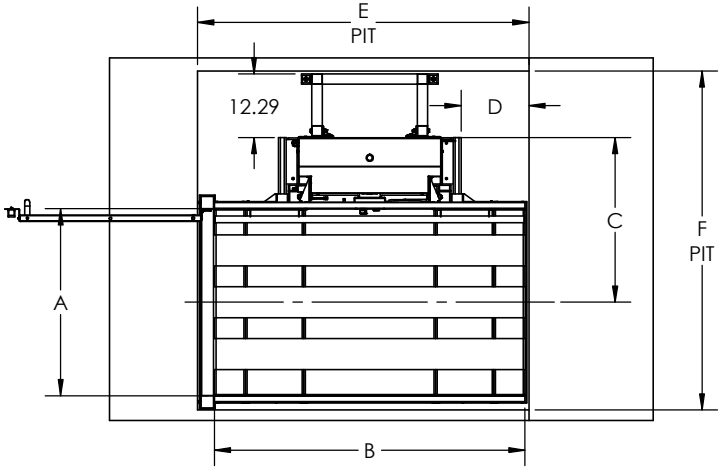


Specifications
Model: VP19
Rated Load: 750 lbs
Drive: Dual winding cable drums / 24 VDC
500 watt motor w/brake
Supply Power: 120 VAC 15A
Operating Power: 24 VDC (DUAL 12V 10AH BATTERIES)
Control Power: 5 VDC
Platform: 36" x 48" (36" x 54")(36" x 60")
(42" x 54")(42" x 60")
Lift Height: 1" - 144"
Speed: 15-18 fpm
Controls: Constant pressure paddle switch
Safety Standards: ASME A18.1, Section 2
CSA B44.1/ASME A17.5
Safety Features: Safety pan, final limit, slack cable brake, emergency stop w/alarm

**DESIGNED TO COMPLY WITH ANSI A18.1 PART 2 WHEN PROPERLY INSTALLED**

| PLATFORM SIZE | A | B | C | D | E | F |
|---|---|---|---|---|---|---|
| 36X48 | 36.25 | 48.00 | 31.81 | 7.13 | 52.00 | 64.75 |
| 36X54 | 36.25 | 54.00 | 31.81 | 7.13 | 58.00 | 64.75 |
| 36X60 | 36.25 | 60.00 | 31.81 | 13.13 | 64.00 | 64.75 |
| 42X54 | 42.25 | 54.00 | 34.81 | 7.13 | 58.00 | 70.75 |
| 42X60 | 42.25 | 60.00 | 34.81 | 13.13 | 64.00 | 70.75 |

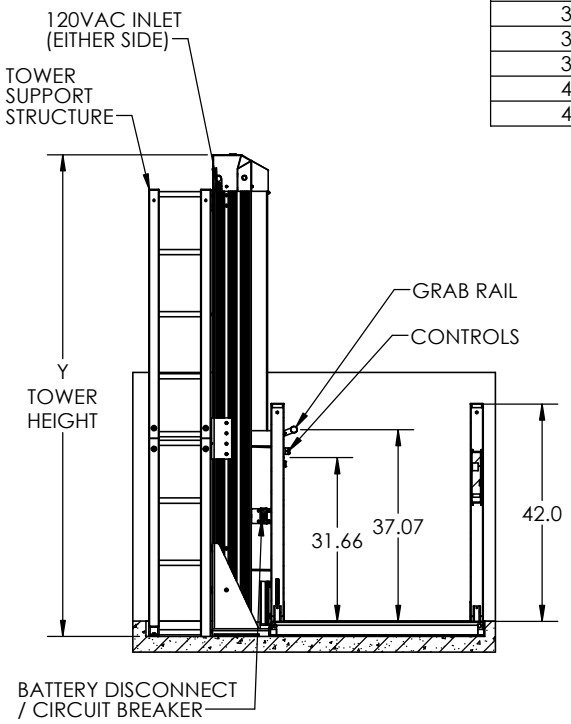


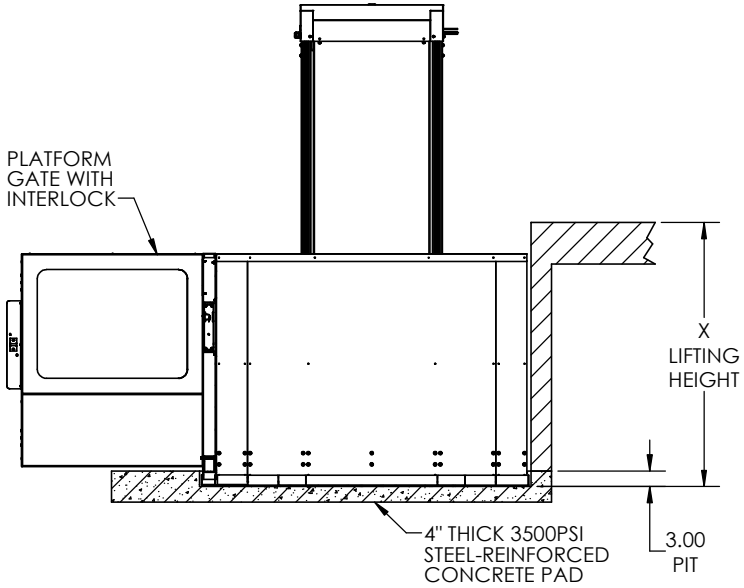


| MODEL | X | Y |
|---|---|---|
| PLO-048 | 48 | 93.06 |
| PLO-072 | 72 | 117.06 |
| PLO-096 | 96 | 141.06 |
| PLO-0120 | 120 | 165.06 |
| PLO-0144 | 144 | 189.06 |

Staying Home Corporation
2501 Anaconda Rd
Harrisonville, MO 64701
816-380-2427
www.stayinghome.com

TITLE: PLATFORM LIFT - OPEN PITTED FREE STANDING

| SIZE | DWG. NO. | REV |
|---|---|---|
| B | TYP-PLO-P FS | 05/09 2019 |

SCALE: WEIGHT: SHEET 1 OF 1