Instructions for LED Mirror Cabinet

(Applicable to sensor control)

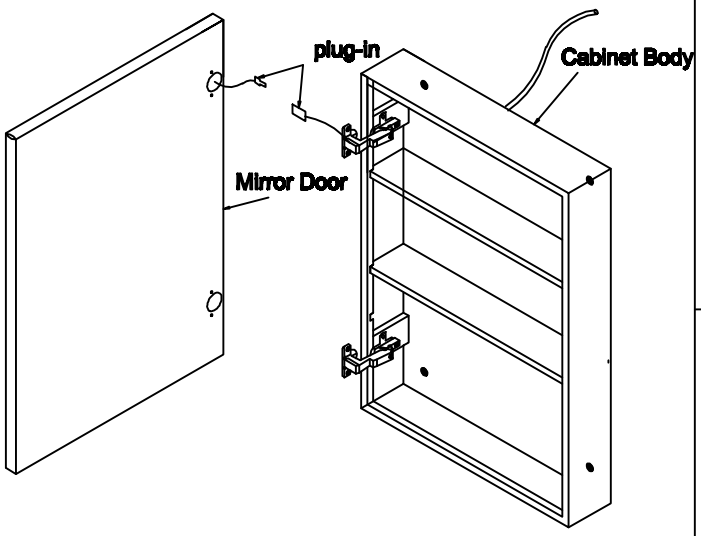

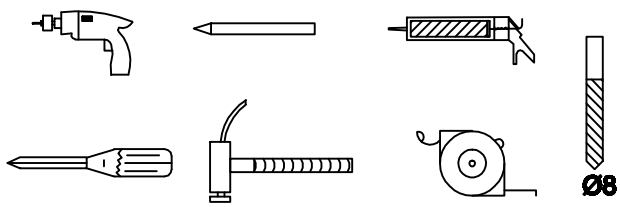

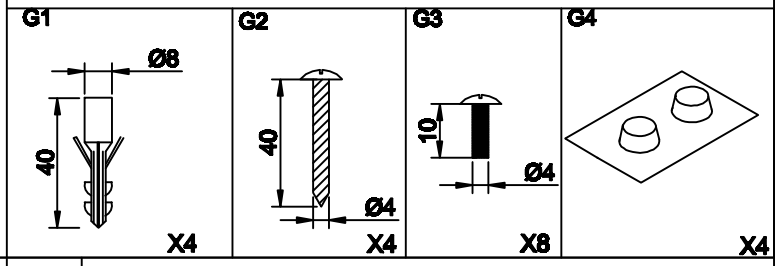

1

Measure width + height of hole location on back of Cabinet body

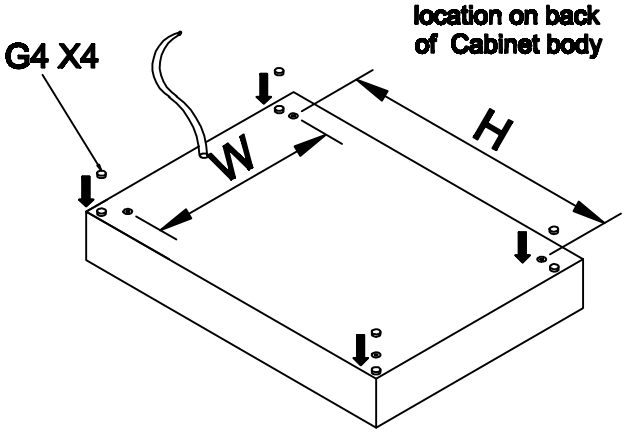

2

Using measurements from "L" to mark holes on wall,Drill holes +insert wall plugs

Please pay attention to the installation position of the product to ensure that the infrared switch works normally. The installation distance should be greater than 25cm, and there should be no obstructions within the sensing distance.

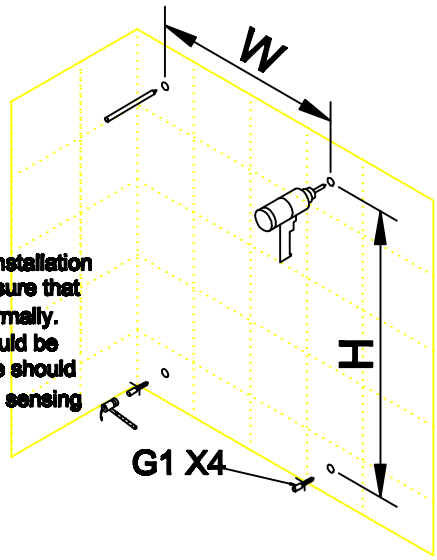

3

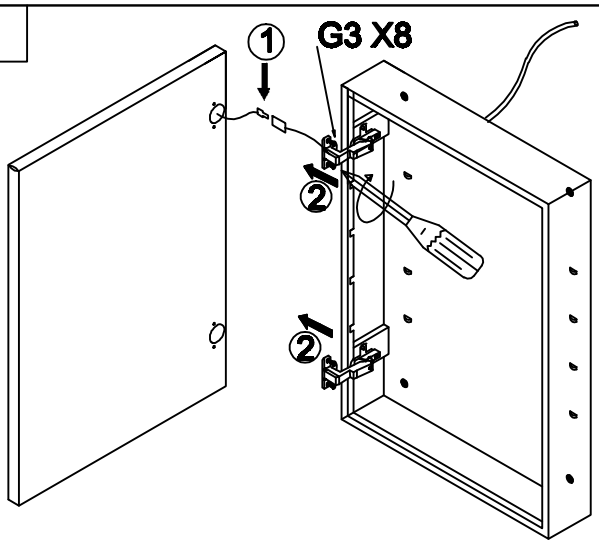
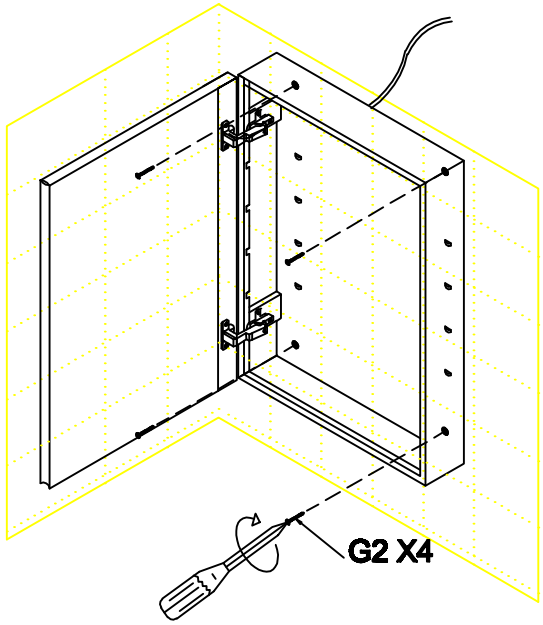
4