Service Parts

MONTANA-42, MONTANA-42H

42” Outdoor Woodburning Fireplace

Beginning Manufacturing Date: Sept 2003
Ending Manufacturing Date: Active

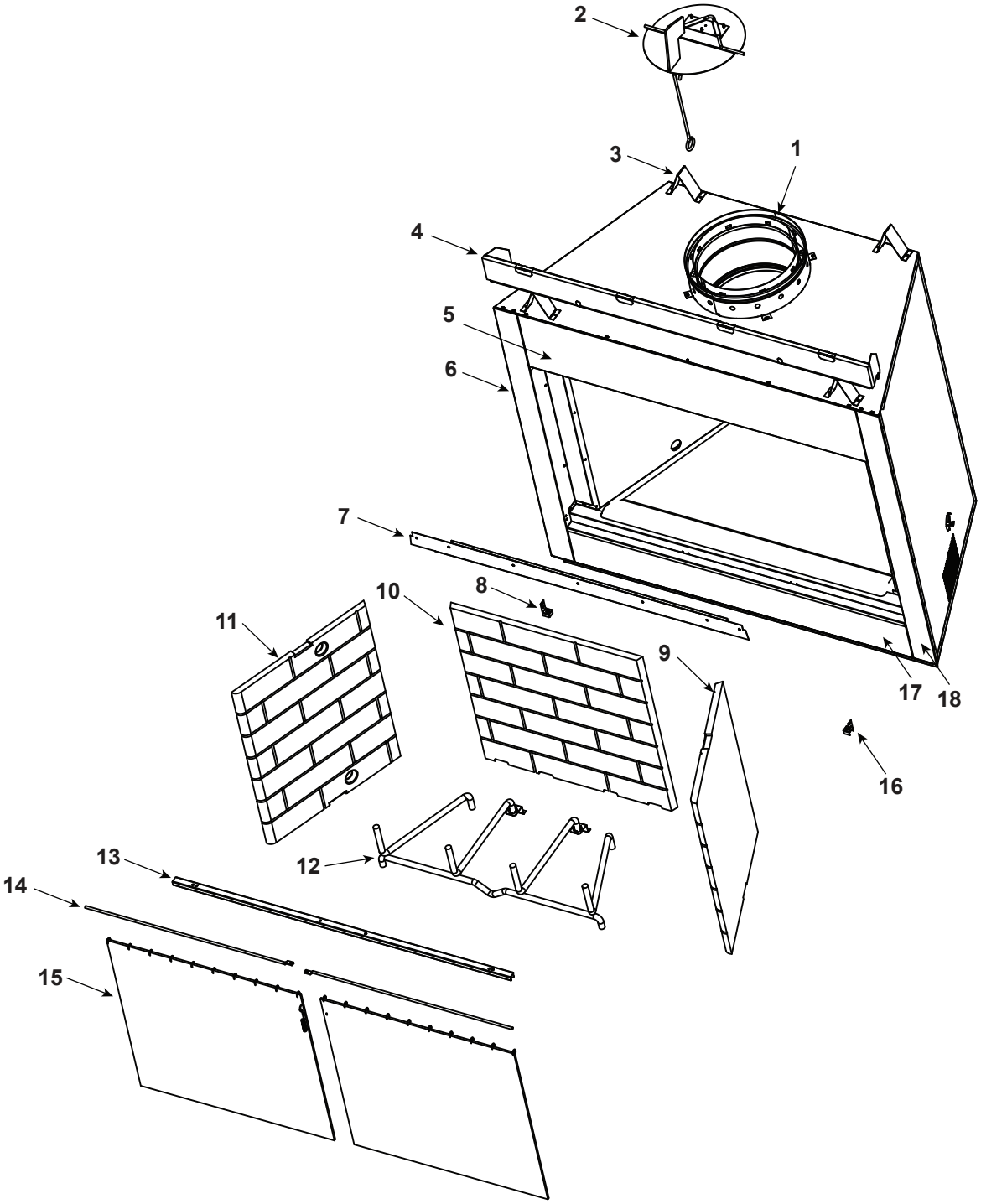

Part number list on following page.

outdoor lifestyles
by hearth & home technologies®

Service Parts

MONTANA-42, MONTANA-42H

Beginning Manufacturing Date: Sept 2003
Ending Manufacturing Date: Active

IMPORTANT: THIS IS DATED INFORMATION. Parts must be ordered from a dealer or distributor. **Hearth and Home Technologies does not sell directly to consumers.** Provide model number and serial number when requesting service parts from your dealer or distributor.

ITEM	DESCRIPTION	COMMENTS	PART NUMBER	Stocked in Depot
1	Starter Collar		30399	
2	Damper Assembly		34454	
3	Top Stand Off	Qty 4 Req	SRV4044-111	
4	Non-Comb Board Assembly		SRV4039-133	
5	Upper Front Face	Overlay	30395L	
6	Side Column Left	Overlay	30375L	
7	Top Door Track		30400	
8	Door Clips	Qty 2 Req	30407	
	Tradtional Refractory			
9	**Right** Side Refractory		SRV28393	
10	Back Refractory		SRV28394	
11	**Left** Side Refractory		SRV28393	
	Hearth Refractory		SRV28391	
	Herringbone refractory available post week 3/04			
9	**Right** Side Refractory		4010-013	
10	Back Refractory		4010-015	
11	**Left** Side Refractory		4010-014	
	Hearth Refractory		4010-020	
12	Grate		GR21	
13	Hearth Pan	Pre AK560843	30405	
	Hearth Stone Retainer		30403	
14	Firescreen Rod	Qry 2 Req	31375	**Y**
15	Screen Assembly	Qty 2 Req	30371	
16	Door Pivet Clip	Qty 2 Req	SRV31527	
17	Bottom Front Face	Overlay	30393L	
18	Side column Right	Overlay	30376L	
	Gas Tube		SRV30412	
	Smoke Shield		30402	
	Air Kit w/box		30416	
	Outside Air Hood	Qty 2 req	SRV33271	
	Nailing Flange	Qty 4 Req	31190	