PARTS FOR DISCONTINUED BOILERS

GB300 Series

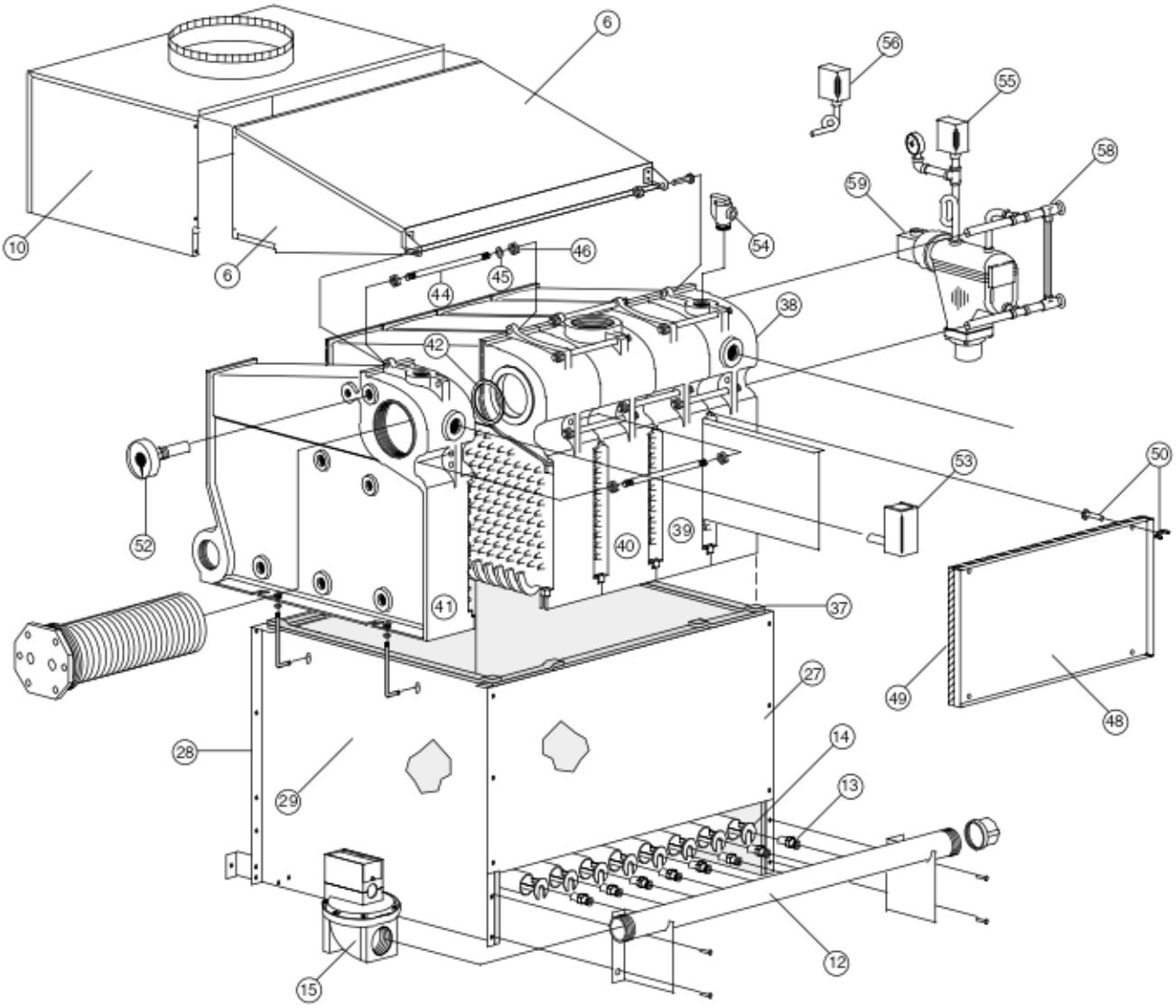

GB300 SERIES REPLACEMENT PARTS

			Number of Sections																
Ref #	**Name of Part**	**Part No.**	**5**	**6**	**7**	**8**	**9**	**10**	**11**	**12**	**13**	**14**	**15**	**16**	**17**	**18**	**19**	**20**	**21**
—	Jacket Less Sides Panels	55177	1																
		55178		1							2	1							
		55179			1							1	2	1					
		55180				1								1	2	1			
		55181					1									1	2	1	
		55182						1										1	2
		55183							1										
		55184								1									
—	Jacket Side Panels, Left & Right	55176	1	1	1	1	1	1	1	1	1	1	1	1	1	1	1	1	1
—	Jacket Splice Panels, Front, Top, Rear & Grill	55185									1	1	1	1	1	1	1	1	1
—	Jacket Screws	60442	32	32	32	32	32	32	32	32	62	62	62	62	62	62	62	62	62

PARTS FOR DISCONTINUED BOILERS

GB300 Series

GB300 SERIES REPLACEMENT PARTS

			Number of Sections																
Ref #	Name of Part	Part No.	5	6	7	8	9	10	11	12	13	14	15	16	17	18	19	20	21
6	Flue Collector	63203	1																
		63204		1															
		63205			1						2	1							
		63206				1						1	2	1					
		63207					1							1	2	1			
		63208						1								1	2	1	
		63209							1									1	2
		63210								1									
10	Draft Hood	63187	1																
		63188		1															
		63189			1						2	1							
		63190				1						1	2	1					
		63191					1							1	2	1			
		63192						1								1	2	1	
		63193							1									1	2
		63194								1									
—	Flue Collector & Draft Hood Hardware	72715	1	1	1	1	1	1	1	1	1	1	1	1	1	1	1	1	1
12	Manifold Less Orifices	63243	1																
		63244		1															
		63245			1														
		63246				1													
		63247					1												
		63248						1											
		63249							1										
		63250								1									
		63253									1								
		63254										1							
		63255											1						
		63256												1					
		63257													1				
		63258														1			
		63259															1		
		63260																1	
		63261																	1
13	Orifices, Natural Gas	60093	8	10	12	14	16	18	20	22	24	26	28	30	32	34	36	38	40
	Orifices, LP Gas	60242	8	10	12	14	16	18	20	22	24	26	28	30	32	34	36	38	40
14	Burner Tubes Less Pilot Bracket w/Shutter NG	63251	7	9	11	13	15	17	19	21	22	24	26	28	30	32	34	36	38
	Burner Tubes w/Pilot Bracket w/Shutter NG	63262	1	1	1	1	1	1	1	1	2	2	2	2	2	2	2	2	2
	Burner Tubes Less Pilot Bracket LP	63282	7	9	11	13	15	17	19	21	22	24	26	28	30	32	34	36	38
	Burner Tubes w/Pilot Bracket LP	63283	1	1	1	1	1	1	1	1	2	2	2	2	2	2	2	2	2
15	Robertshaw 7000 DERHC, Natural Gas, 1"	51186	1	1	1	1													
	Robertshaw LP Conversion Kit	51083	1	1	1	1													
	Honeywell V88A-1618, Natural Gas, 1"	72733					1	1	1	1									
	Honeywell V88A-1618, LP Gas, 1"	72733							1	1	1	1	1	1					
	Honeywell V8943C-1018, LP Gas, 1"	50174							1	1	1	1	1	1					
	Honeywell V88A-1626, Natural Gas, 1-1/4"	72734									1	1	1	1	1	1	1	1	

PARTS FOR DISCONTINUED BOILERS

GB300 Series

GB300 SERIES REPLACEMENT PARTS

			Number of Sections																
Ref #	Name of Part	Part No.	5	6	7	8	9	10	11	12	13	14	15	16	17	18	19	20	21
15	Honeywell V8944B-1019 Natural Gas, 1"	50177	1	1	1	1	1	1											
	Honeywell V8944B-1027 Natural Gas, 1-1/4"	50178							1	1	1	1	1	1	1				
	Honeywell V8944B-1035 Natural Gas, 1-1/2"	50179														1	1	1	1
	Honeywell V88A-1626, LP Gas, 1-1/4"	72734													1	1	1	1	1
	Honeywell V8943C-1026, LP Gas, 1-1/4"	50175													1	1	1	1	1
	Honeywell V88A-1634, Natural or LP Gas, 1-1/2"	72735																	1
—	Manual Main Shut Off Valve, 1"	62023	1	1	1	1	1	1											
	Manual Main Shut Off Valve, 1-1/4"	62024							1	1	1	1	1	1	1	1	1	1	
	Manual Main Shut Off Valve, 1-1/2"	62025																	1
—	Manual Pilot Shut Off Valve,	62028	1	1	1	1	1	1	1	1	2	2	2	2	2	2	2	2	2
—	Pilot Regulator RV12LT	50961	1	1	1	1	1	1	1	1	1	1	1	1	1	1	1	1	1
—	Pilot Ass'y PSE-NA29, Natural Gas	72743	1	1	1	1	1	1	1	1	2	2	2	2	2	2	2	2	2
—	Pilot Ass'y PSE-NA29, LP Gas	72739	1	1	1	1	1	1	1	1	2	2	2	2	2	2	2	2	2
	Intermittent Pilot Ignition Controls																		
—	Pilot, Intermittent, Natural Gas	50978	1	1	1	1	1	1	1	1	2	2	2	2	2	2	2	2	2
—	LP Pilot Orifice for the above pilot	50998	1	1	1	1	1	1	1	1	2	2	2	2	2	2	2	2	2
—	Intermittent Ignition Module, S8610M	51180	1	1	1	1	1	1	1	1	2	2	2	2	2	2	2	2	2
—	Pilot Gas Solenoid Valve V8046C-1014 1/4"	51099	1	1	1	1	1	1	1	1	2	2	2	2	2	2	2	2	2
—	CSD-1 Reset Module UTC1145-1	51199	1	1	1	1	1	1	1	1	2	2	2	2	2	2	2	2	2
	Ignition Control UTC 1003-616A	51198	1	1	1	1	1	1	1	1	2	2	2	2	2	2	2	2	2
	Flame Sensor PSE-HB1-CSD	50029	1	1	1	1	1	1	1	1	2	2	2	2	2	2	2	2	2
	Continuous Pilot Ignition Controls																		
—	Pilot, Continuous, Natural Gas PSE-NA30	50972	1	1	1	1	1	1	1	1	2	2	2	2	2	2	2	2	2
—	LP Pilot Orifice for the above pilot	50998	1	1	1	1	1	1	1	1	2	2	2	2	2	2	2	2	2
—	Pilot Flame Sense Switch Gas Liter 2026-17	51188	1	1	1	1	1	1	1	1	2	2	2	2	2	2	2	2	2
	Thermocouple (K16RA)	51006	1	1	1	1	1	1	1	1	2	2	2	2	2	2	2	2	2
—	Automatic Pilot Switch L62GB-1C	50970	1	1	1	1	1	1	1	1	2	2	2	2	2	2	2	2	2
27 + 28	Burner Base Less Sides	63265	1																
		63266		1							1								
		63267			1						1	2	1						
		63268				1							1	2	1				
		63269					1								1	2	1		
		63270						1									1	2	1
		63271							1										1
		63272								1									
29	Burner Base Side Panels	63273	1	1	1	1	1	1	1	1	1	1	1	1	1	1	1	1	1
—	Burner Base Splice Plates	72694									1	1	1	1	1	1	1	1	1
—	Burner Base Bolts	60246	12	12	12	12	12	12	12	12	32	32	32	32	32	32	32	32	32
	Burner Base Nuts	60245	16	16	16	16	16	16	16	16	40	40	40	40	40	40	40	40	40
37	Base to Section Insulation, (25 foot roll)	60201	1	1	1	1	1	1	1	1	1	1	2	2	2	2	2	2	2
38	Cast Iron Section, Right Side	3650	1	1	1	1	1	1	1	1	1	1	1	1	1	1	1	1	1
39	Cast Iron Section, Intermediate w/o tapping	3666																	
40	Cast Iron Section, Intermediate w/ 3" tapping, (steam boilers)	3649	1	1	1	1	1	2	2	2	2	2	2	3	3	3	3	3	3
41	Cast Iron Section, Left Side	3651	1	1	1	1	1	1	1	1	1	1	1	1	1	1	1	1	1

PARTS FOR DISCONTINUED BOILERS

GB300 Series

GB300 SERIES REPLACEMENT PARTS

			Number of Sections																
Ref #	**Name of Part**	**Part No.**	**5**	**6**	**7**	**8**	**9**	**10**	**11**	**12**	**13**	**14**	**15**	**16**	**17**	**18**	**19**	**20**	**21**
42	Gasket, Upper Port	60248	4	5	6	7	8	9	10	11	12	13	14	15	16	17	18	19	20
	Gasket, Lower Port	60249	4	5	6	7	8	9	10	11	12	13	14	15	16	17	18	19	20
—	3/8" Rope, 42" length	71601	4	5	6	7	8	9	10	11	12	13	14	15	16	17	18	19	20
44	Draw Rod 1/2" x 7-1/2"	60358	12	15	18	21	24	27	30	33	36	39	42	45	48	51	54	57	60
45	1/2 Flat Washer	62098	12	15	18	21	24	27	30	33	36	39	42	45	48	51	54	57	60
46	1/2 Hex Nut	60875	24	30	36	42	48	54	60	66	72	78	84	90	96	102	108	114	120
48	Cleanout Cover	69696	1				2	1						2	4	3	2	1	
		69697		1				1	2	1						1	2	3	4
		69698			1					1	2	1							
		69699				1						1	2	1					
49	Cleanout Cover Insulation	65135	1				2	1						2	4	3	2	1	
		65136		1				1	2	1						1	2	3	4
		65137			1					1	2	1							
		65138				1						1	2	1					
50	Cleanout Cover Hardware Set	72695	1	1			2	2	2	1				2	4	4	4	4	2
	Cleanout Cover Hardware Set	72696			1	1				1	2	2	2	1					2
	Water Controls & Trim																		
52	Temperature Pressure Gauge	60290	1	1	1	1	1	1	1	1	1	1	1	1	1	1	1	1	1
53	Aquastat L4006A	50511	1	1	1	1	1	1	1	1	1	1	1	1	1	1	1	1	1
	Well 3/4" x 3"	50502																	
	Aquastat, (manual reset) L4006E	14-1001	1	1	1	1	1	1	1	1	1	1	1	1	1	1	1	1	1
54	3/4" x 1" Relief Valve 40#, (water)	61997	1	1	1	1	1	1	1	1	1	1							
	1" x 1-1/4" Relief Valve 40#, (water)	61998											1	1	1	1	1	1	
	1-1/4" x 1 1/2" Relief Valve 40#, (water)	61999																	1
	Steam Controls & Trim																		
54	1" x 1" Relief Valve 15#, (steam)	61982	1	1	1	1	1												
	1-1/4" x 1-1/2" Relief Valve 15#, (steam)	61983						1	1	1	1	1	1	1					
	1-1/2" x 2" Relief Valve 15#, (steam)	61984													1	1	1	1	1
55	Steam Pressuretrol PA404A-1009	50493	1	1	1	1	1	1	1	1	1	1	1	1	1	1	1	1	1
56	L4079B-1033 Steam Pressuretrol, (manual reset)	50495	1	1	1	1	1	1	1	1	1	1	1	1	1	1	1	1	1
—	Steam Gauge	60268	1	1	1	1	1	1	1	1	1	1	1	1	1	1	1	1	1
58	Gauge Glass Set	61931	1	1	1	1	1	1	1	1	1	1	1	1	1	1	1	1	1
59	M&M 67-S-2 Low Water Cut-off	51005	1	1	1	1	1	1	1	1	1	1	1	1	1	1	1	1	1