PARTS FOR DISCONTINUED BOILERS

GB100 Series

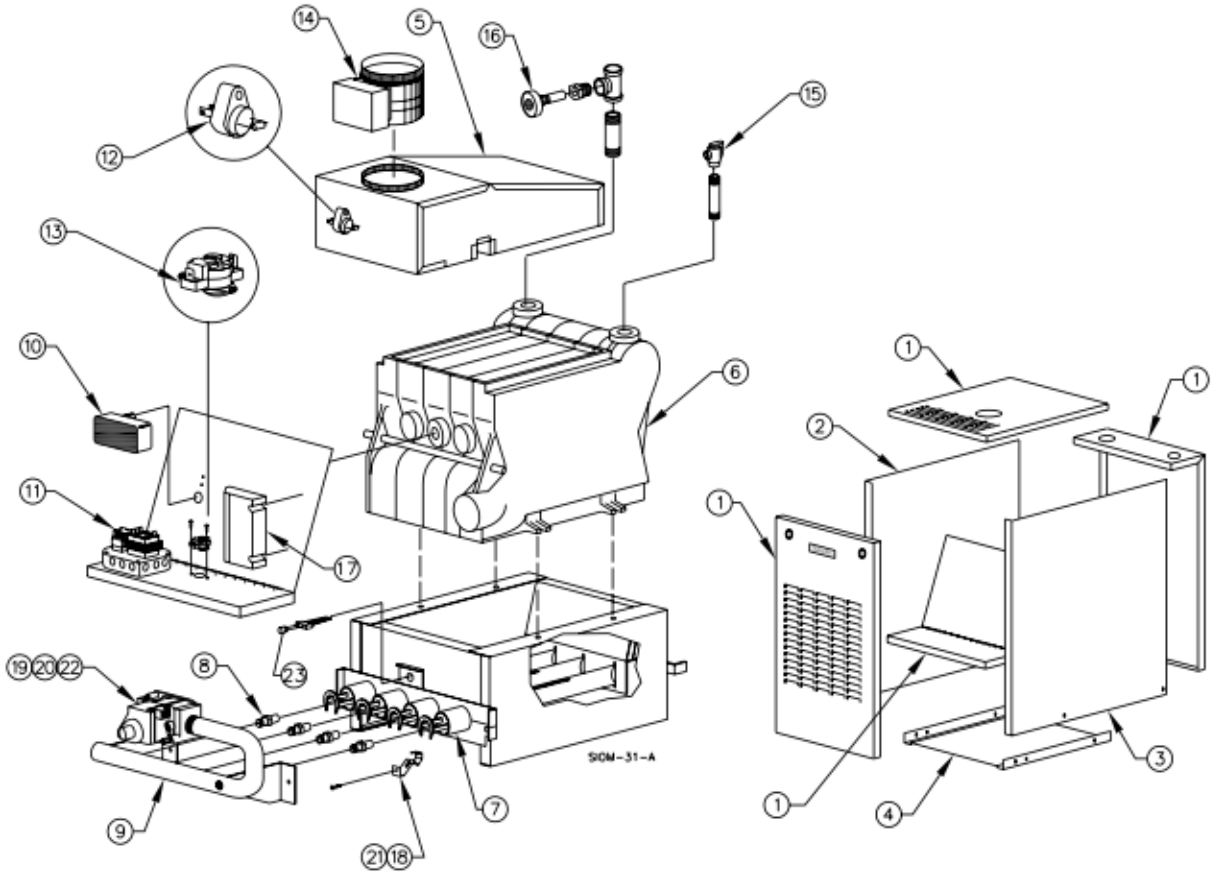

PARTS FOR DISCONTINUED BOILERS

GB100 Series

GB100 SERIES REPLACEMENT PARTS

			Number of Sections									
Ref #	**Name of Part**	**Part No.**	**3**	**4**	**5**	**6**	**7**	**8**	**9**	**10**	**11**	**12**
7	Burner w/air shutter	69445	2	3	4	5	6	7	8	9	10	11
8	Burner Orifice (#42, NG)	60176	2	3	4	5	6	7	8	9	10	11
	Burner Orifice (#54, LP)	60177	2	3	4	5	6	7	8	9		
9	Manifold	69786	1									
		69787		1								
		69788			1							
		69789				1						
		69790					1					
		69791						1				
		69792							1			
		69793								1		
		69794									1	
		69795										1
10	High Limit (L4080B-1253)	50155	1	1	1	1	1	1	1	1	1	1
11	Control Center (R8285D-1026) 40 va trans.	50154	1	1	1	1	1	1	1	1	1	1
12	Spill Switch (262 deg. F) 4D4257A	60567	1	1	1	1	1	1	1	1	1	1
13	Rollout Switch (350 deg. F) 60T15 (Manual Reset)	60226	1	1	1	1	1	1	1	1	1	1
14	Vent Damper (5")	69425	1	1								
	Vent Damper (6")	69426			1	1						
	Vent Damper (7")	69427					1	1				
	Vent Damper (8")	69428							1	1		
	Vent Damper (9")	69429									1	1
15	Pressure Relief Valve (30 psi)	61988	1	1	1	1	1	1	1	1	1	1
16	Temp & Pressure Gauge	60265	1	1	1	1	1	1	1	1	1	1
—	Condensate Shield (CON & INT)	55761	1	1	1	1	1	1	1	1	1	1
	Spark Ignition - Honeywell											
17	Ignition Module (S8600M-1013)	51177	1	1	1	1	1	1	1	1	1	1
18	Pilot-Igniter Sensor PSE-NA29 NG & LP***	50978	1	1	1	1	1	1	1	1	1	1
	***For LP also order LP orifice	50998	1	1	1	1	1	1	1	1	1	1
19	Gas Valve (VR8304M-3103) NG & LP***	50143	1	1	1	1	1	1	1	1	1	1
	***For LP also order LP orifice	50701	1	1	1	1	1	1	1	1	1	1
	Standing Pilot - Honeywell											
—	Thermocouple (K16RA)	51006	1	1	1	1	1	1	1	1	1	1
20	Gas Valve (VR8300) NG & (LP 3 - 10 Sec.***)(50068)	001-77064	1	1	1	1	1					
	Gas Valve (VR8300) NG & (LP 11 & 12 Sec.***)	50069						1	1	1	1	1
	***For LP also order LP orifice	50701	1	1	1	1	1	1	1	1	1	1
21	N.G. Pilot Assembly (Q314A-6961)***	50018	1	1	1	1	1	1	1	1	1	1
	***For LP also order LP orifice	61015	1	1	1	1	1	1	1	1	1	1
	HSI - FENWALL IGNITION SYSTEM											
20	Ignition Module (05-319004-051)	72850										
	Jumper Harness for Ignition Module (05-316265-051) Must order with part #72850	73072										
17	Ignition Module (35-655927-001) (Fenwall)	50337	1	1	1	1	1	1	1	1	1	1
21A	Igniter (Norton)	50072	1	1	1	1	1	1	1	1	1	1
21B	Igniter with Bracket (Crystal Technica)	70-1049	1	1	1	1	1	1	1	1	1	1
—	Norton Igniter System to Crystal Technica	21-1500	1	1	1	1	1	1	1	1	1	1
22	Gas Valve 36J (Replacement for 36E01)	21-1503	1	1	1	1	1					
	Gas Valve (36H32-423) NG	50009						1	1	1	1	1
	Gas Valve (VR8305M-3506) LP	50057	1	1	1	1	1	1	1	1		
—	Igniter Bracket	61239	1	1	1	1	1	1	1	1	1	1