ORDER DETAILS	
MOCKUP NO.	WUFOO.
INQUIRY NO.	INQUIRY..V1
ORDER NO.	
PRODUCT DETAILS	
SIZE	ONE AND A QUARTER SIZE (O&Q)
PAPER TYPE	
QUANTITY	
BOX PACKING	25 BOOKLETS A BOX
VALUE ADDITION	
PRINTING EFFECT	CMYK

DIE CUT LINE

FOLD LINE

BLEED LINE

REMARKS:
- Artwork should be submitted in AI, EPS, PDF, CDR, PSD.
- For JPEG, PNG and PSD please submit your artwork with a minimum of 300dpi

Please see the text and graphic direction guideline below.

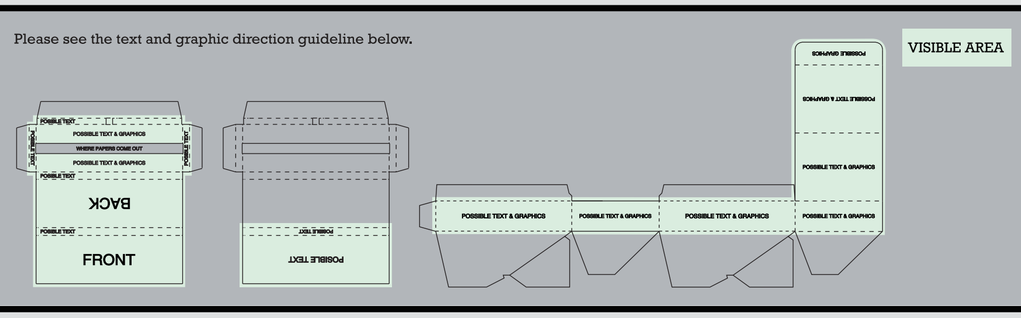

☐ I accept the artwork and understand that any mistakes or omissions is my responsibility.

DATE: .....

PRINT NAME: .....

APPROVAL SIGNATURE: .....

OUTSIDE

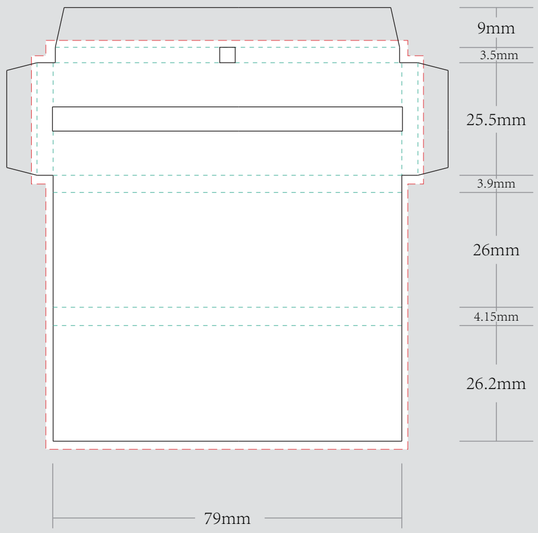

INSIDE

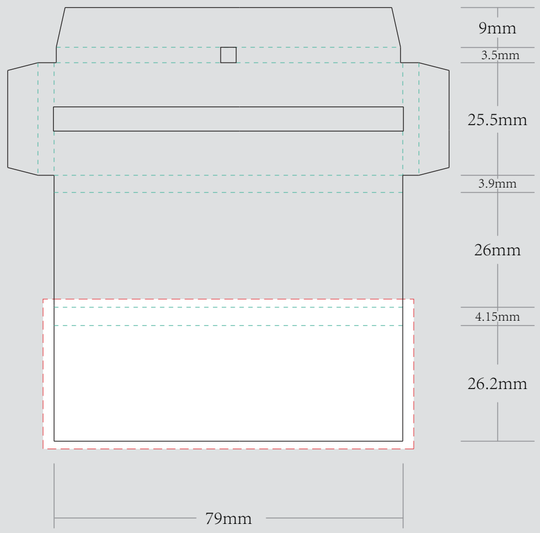

EXAMPLE

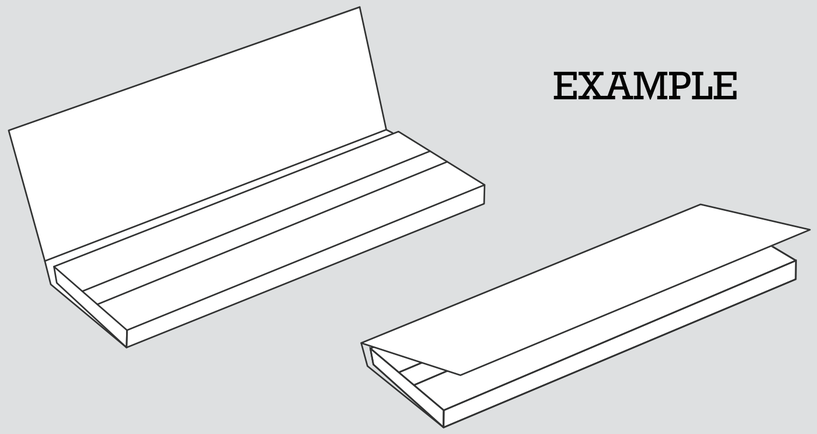

DISPLAY BOX

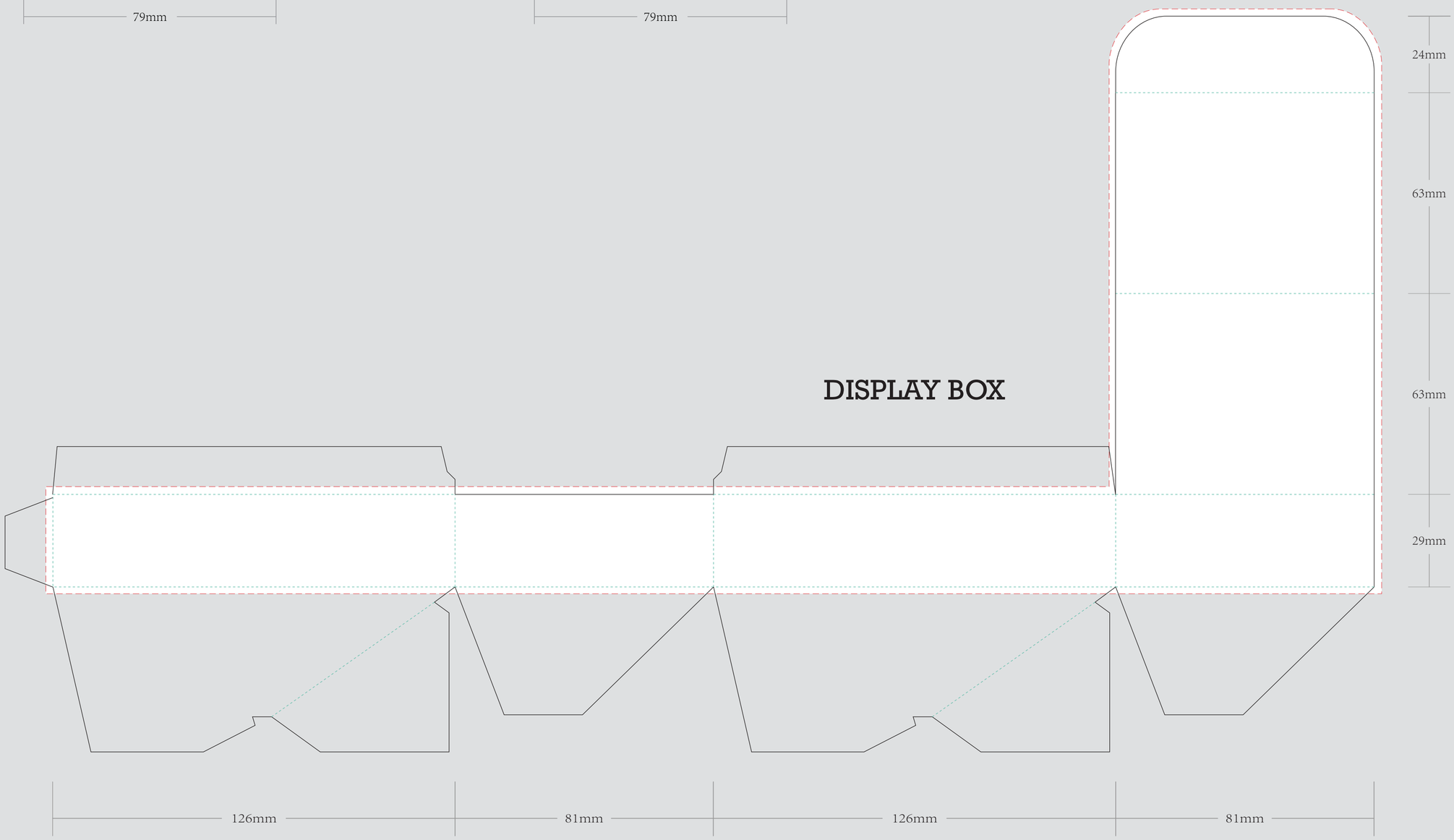

CHECK BY SARA, 01.2018