USER MANUAL

Coating Thickness Tester

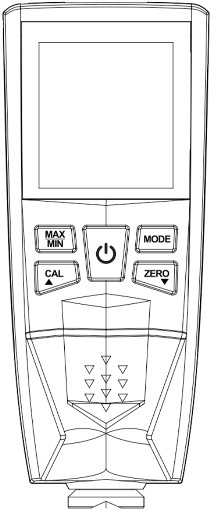

⚠ Please read this manual carefully before using this product and keep it properly for future use

1. Overview

This instrument adopts a composite probe to measure th
electroplated coating on the surface of metal materials
sensor without damage. It has the functions of LC
backlight, maximum and minimum value locking,
calibration, unit conversion and automatic shutdown, et
automatically detects the properties of the base material
of coating through electromagnetic induction and eddy
This instrument is an essential measuring tool for
treatment engineering, and can detect steel, iron, coppe
etc and measure the thickness of non-conductive coati
oxide film, plastic, ceramic) on metal surface. It’s widely
turing, metal processing, chemical industry, commodity
Principle of Fe probe magnetic induction:
When the probe is in close contact with the coated mag
probe and the magnetic material form a closed magnet
thickness of the coating corresponds to the magnetic ci
ing of the coating thickness can be done by detecti
magnetic resistance.
Principle of NFe probe eddy current effect:
When the probe is in close contact with the coated n
material, the probe and the material generate eddy
feedback effect of eddy current on the probe correspo
thickness. The measuring of the coating thickness
detecting this feedback amount.

ne thickness of the
through a precise
CD digital display,
data reset, data
c. It is an unit that
and the thickness
current effect.
material surface
r, aluminum, alloy,
ng (such as paint,
used in manufac-
inspection, etc.

netic material, the
tic circuit, and the
rcuit. The measur-
ng the change of

onmagnetic metal
current, and the
nds to the coating
can be done by

2. Notes

* After receiving the instrument, check and confirm whether it is damaged in transit.

* During detection, it shouldn't be used in the situation where it's the substrate edge, the surface is severely deformed or covered with dust and stains, or the area is too small.

* Non-professional maintenance personnel are forbidden to open the instrument to adjust or repair it.

* If there is dust or other stuff on the probe surface, please wipe it with a clean and wet dust-free cloth. It is forbidden to clean it with solvent or abrasive.

* When the symbol (▭) is displayed on the screen, it means that the battery is insufficient, and should be replaced in time. If it is stored for a long time, please remove the battery to prevent from leakage and corrosion.

* The standard sheet equipped with the instrument is a high-precision accessory, so please keep it properly to prevent the surface from being scratched, deformed or lost. If the surface is covered with dust or stains, please wipe it with a clean dust-free cloth during calibration.

* If the instrument has a large measurement error and abnormal data in use, it should be stopped. First, check whether the battery power is insufficient, turn off the power and restart it. If it fails to return to normal, try to resume the factory settings. If the above methods still fail, please contact the dealer in time.

3. Name of components

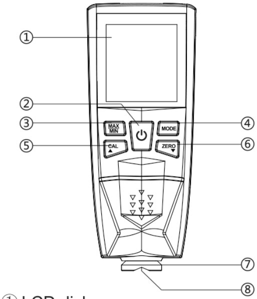

① LCD dislay
② Power/Long press or power on a
③ MAX/MIN maximum and minim
④ MODE mode conversion key
⑤ CAL calibration key, digital adju
⑥ ZERO reset key, digital adjustm
⑦ Probe
⑧ V-groove, used for measuring
surface of steel pipe.
⑨ Battery compartment
⑩ Lanyard hole
⑪ Charging port, indicator LED

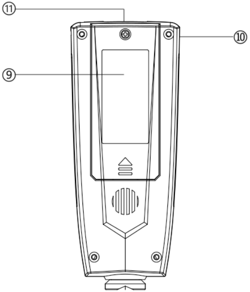

nd off,and short press for unit conversion

num value locking

stment plus

nent minus

convex curved surface, such as the

4. Display Description

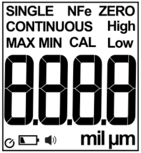

Symbols	Description
SINGLE	Single point measurement mode
CONTINUOUS	Fast continuous measurement mode
Fe	The base material is Fe, and the magnetic material are steel/iron;
NFe	The base material is aluminum, and the nonmagnetic materials are copper/aluminum, etc.
ZERO	Reset
High	High alarm
LOW	Low alarm
MAX	Maximum value
MIN	Minimum vale
CAL	Calibration
mil	Mil
um	Um
⏻	Automatic shutdown symbol
🔋	Battery under-voltage symbol
🔊	Voice broadcast(only for lithium battery voice model)

5. Technical parameters

Type	Battery	lithium battery voice
Display	LCD	√
Measuring base	Iron base or aluminum base	√
Sampling method	Iron base: magnetic induction	√
	Aluminum base: eddy current effect	√
Measuring range	0-1500um	√
Resolution	0.1um	√
Accuracy	Iron base or aluminum base / ±（3%+2um）	√
Automatic shutdown	About 10 minutes	√
Measurement mode	single/continuous	√
Unit	um	um/mil
The radius of the minimum convex curvature	5mm	√
The radius of the minimum concave	50mm	√
The diameter of the minimum measuring area	20mm	√

The minimum thickness of base material	Iron base or 0.5mm/ aluminum base 0.3mm
Working current	About 30mA
Working environment	0～50℃/0～80%RH
Power	1.5V×2AAA
USB	NO
Size	120*48*26
Weight	About 95g(excluding battery)
Voice broadcast	NO

6. How to use

1.Power on and off : Press the (⏻) key for a lo
the power supply, and the self-test of the instrume
seconds. When starting up, please keep the se
away from any metal object, and from the metal
and strong electromagnetic field, otherwise the
cannot be guaranteed and you need to resume th
to the above requirements.

√
√
√
Built-in lithium battery/ 1000mAh/3.7v
USB/5V/1A/Type-C
√
About 100g (including lithium battery)
Voice broadcast

ng time to turn on or off
nt will count down for 5
nsor of the instrument
object for at least 5cm
measurement accuracy
e instrument according

2.Unit conversion: Press the power key shortly after starting to select the measuring unit of um/mil. (Lithium battery voice model, short press to turn on or turn off voice function)

3.Mode selection: Press the MODE key shortly to select the required measurement mode: SINGLE is the single point measurement mode, and CONTINUOUS is the fast continuous measurement mode.

4.SINGLE single point mode: Hold the instrument in hand and quickly place the probe vertically on the surface of the material to be measured and lightly press it . The buzzer sounds and the measured value is displayed on the screen. Before the next measurement, the probe should be more than 5cm away from the surface of the substrate, and the measurement interval should be 2 seconds.

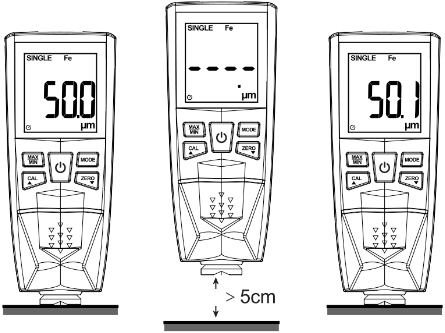

5.CONTINUOUS Fast a
instrument in hand and q
of the material to be mea
is displayed on the screer
point or slide on the surfa
ous measurement.

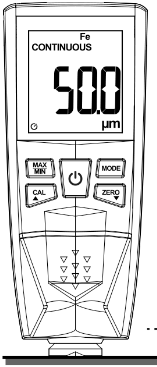

nd Continuous measurement mode : Hold the
uickly place the probe vertically on the surface
sured and lightly press it . The measured value
n. The user can arbitrarily change the measuring
ce of the substrate to quickly complete continu-

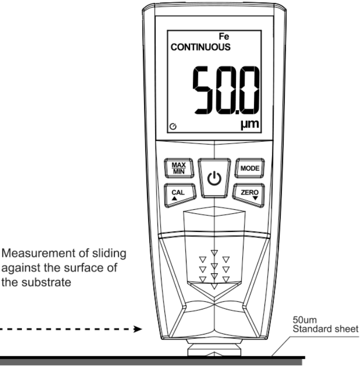

6.Automatic identification of substrate properties: during measurement, the instrument automatically identifies the metal properties of the substrate, and the top of the screen shows that the the base material of Fe is magnetic steel, iron, etc or the base material of NFe is nonmagnetic aluminum, aluminum alloy, copper, etc.

7.MAX/MIN locking function: during measurement, when the number is displayed on the screen, press the MAX/MIN key for a short time to change the required maximum or minimum locking function. If you measure the substrate surface for many times, the instrument will lock the measured maximum or minimum value. The MAX/MIN locking function of CONTINUOUS measurement mode can only be used to lock the maximum or minimum value during sliding measurement on the substrate surface. Because the probe has high sensitivity, it can lock the value at the moment of contact during measurement, so it cannot be used for continuous single point measurement.

8.High High alarm /LOW LOW alarm function: default alarm value (High 1500um/Low 0um). Press the MODE key for a long time to enter the alarm setting mode. Press the MODE key for a short time to switch to High or Low. Press the () key to adjust the alarm value, and you can set any alarm thickness value.

9.ZERO reset function: Press the MODE key to change the SINGLE single point measurement mode, and the probe will be laid flat on the iron-based or aluminum-based surface. If the value is not ZERO, keep the probe in steady contact with the substrate. Press the ZERO key shortly, and the value displayed on the screen will be zero, and the instrument reset is completed.

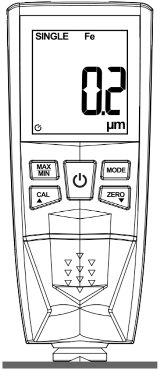

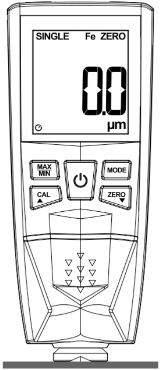

7. Resume the factory settings

When the instrument is turned on, press the ZERO key for a it will beep twice to resume the factory setting. If the high-low has been set, it is necessary to manually resume the default

8. User-defined calibration

The calibration is mainly used for fine-tuning the measurem of the instrument. When the probe is slightly worn/stored fo temperature and humidity of the environment are harsh/the measured is special, there will be slight deviation of the me At this time, the user needs to simply calibrate the ins operation steps are as follows:

1. Take out the two calibration substrates (the heavy one is i light one is aluminum-based) that are attached with the unit, flat on the desktop, and take out the standard sheet (50um/ 500um/1000um) attached.

Notes:

①User calibration mode : 0.0um/50um/100um/250um/50 totally 6 calibration points.

②It is strictly forbidden to superimpose the standard sheets If the calibration is wrong accidentally, it can be repeated.

③User calibration mode can be multi-point or single-point one time.

④ Automatic identification of iron base and aluminum calibration does not require any conversion.

long time, and
alarm function
value.

nent accuracy
r too long/the
material to be
asured value.
strument. The

ron-based/the
, and lay them
100um/250um/

0um/1000um,

for calibration.

calibration at

base during

2.When the instrument is turned on, long press the CAL key, it beeps once, and the display shows (CAL)CONTINUOUS for the user calibration mode.

3. Zero-point calibration: Place the probe vertically on the iron-based or aluminum-based surface and lightly press it. If the measured value is not zero, hold the unit to keep the probe in steady contact with the substrate. Press the CAL key for a short time, it beeps once and the calibration point 00 flashes. When the screen shows 0.0um, the zero-point calibration is completed. Press the CAL key for a long time to exit the user calibration mode.

4. Place the standard sheet 50um/100um/250um/500um/1000um respectively on the surface of iron base or aluminum base, and the corresponding calibration point should be displayed when the probe contacts. If there is a big error between the display and the placed standard sheet, the method of pressing the CAL key is the same as that of zero calibration.

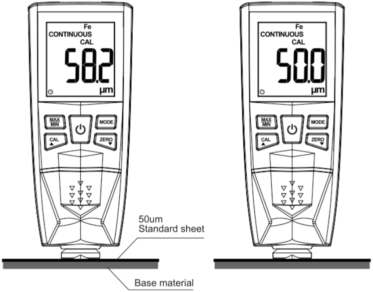

9. Replace the

① Turn off the pow
② Use a screwdriv
battery cover o
③ Remove the ba
old battery.
④ Replace with a
⑤ Install the batte
fixing screws.

10. Charge

1.Please charge in
heat dissipation, u
tion requirements,
2.When the unit di
charge the unit as
and the actual tim
3.When the instrur
charging, green in
the charging plug
4.The unit autom
charging and can
when the charging

battery

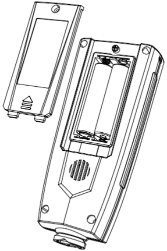

ver supply of the instrument.

ver to remove the screw of the
n the back of the instrument.

ttery cover and remove the

new 1.5V x 2AAA battery.

ry cover and tighten the

an environment with good ventilation and
sing an adapter that meets the relevant safety certifica-
and pay attention to the electricity safety specifications.
isplays (🔋) , it means that the battery is low. Please
soon as possible. The charging time is about 4 hours,
e varies due to various factors.
ment is charged, the indicator light is shown in red. After
dicates that the battery has been filled. Please unplug
in time. Do not charge for a long time.
atically shuts down and cannot be started, during
be used normally after the charging is completed or
is stopped.

11. Attachments

Name	Quantity
Host	1
Iron base	1
Aluminum base	1
Standard sheet	5
Instruction manual	1
Hanging roe	1
Bag	1
Alkaline battery 1.5V /AAA	2
USB Type-C charging cable (only for lithium battery voice model)	1

USER MANUAL

MADE IN CHINA

CE RoHS

M101040043

⚠ Please read this manual carefully before using this product and keep it properly for future use