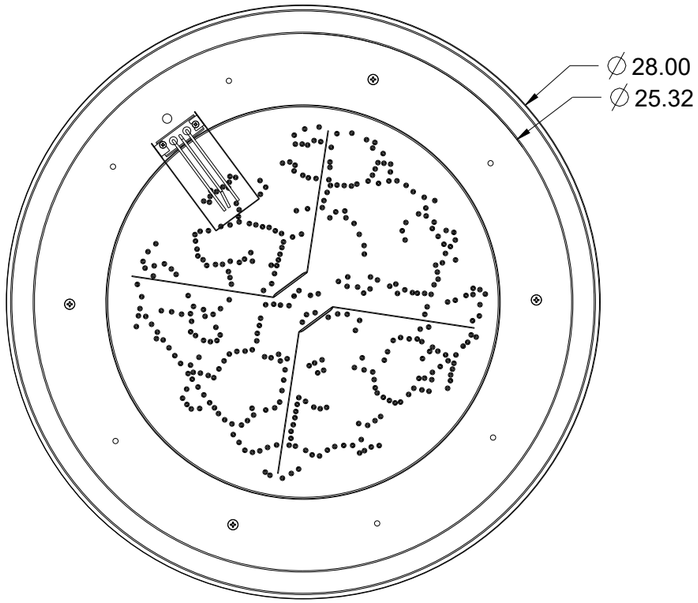

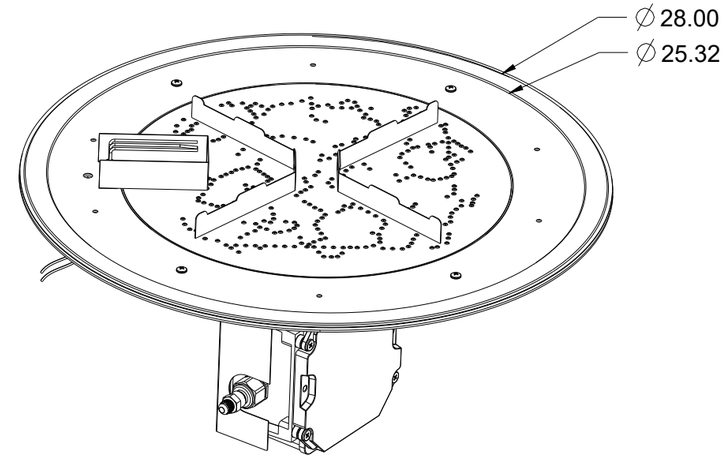

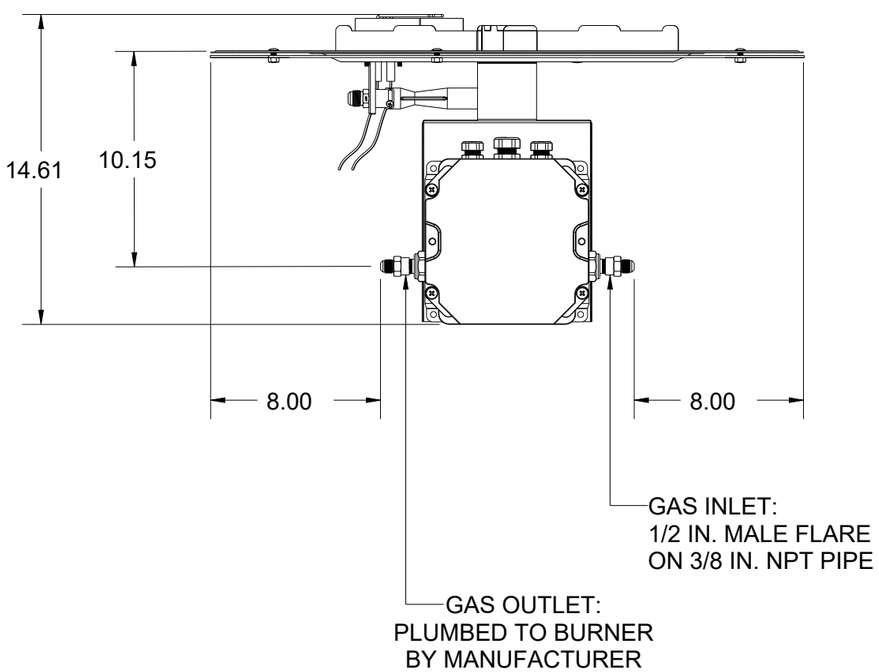

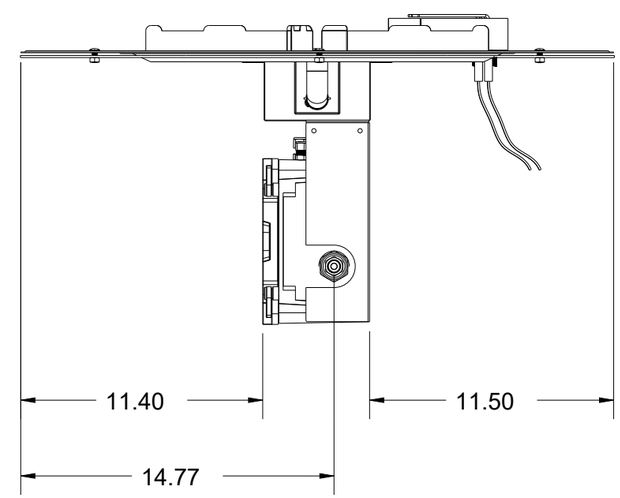

REV	ECR	DATE	DESCRIPTION

UNLESS OTHERWISE SPECIFIED

TOLERANCES:

DECIMALS: X.X ±.06 X.XX ±.03 X.XXX ±.015

ANGLES: ±1°

MATERIAL/THICKNESS: 304 STAINLESS STEEL / 20 GA. (BURNER)

DRAWN BY: CB

DATE: 7/25/19

FINISH: NONE (2B)

PART NUMBER: BI28-DSI

REV.LEVEL: A

SCALE: .150

THE OUTDOOR GREATROOM COMPANY

PART NAME: CRYSTAL FIRE PLUS ROUND BURNER INSERT: 28 IN. DIAMETER WITH DSI SYSTEM