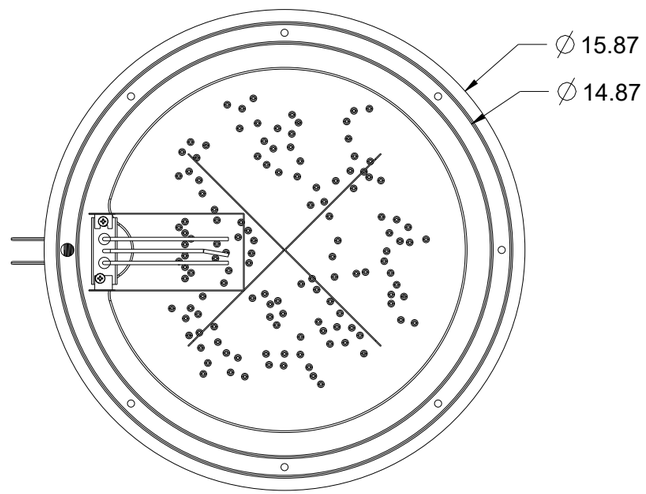


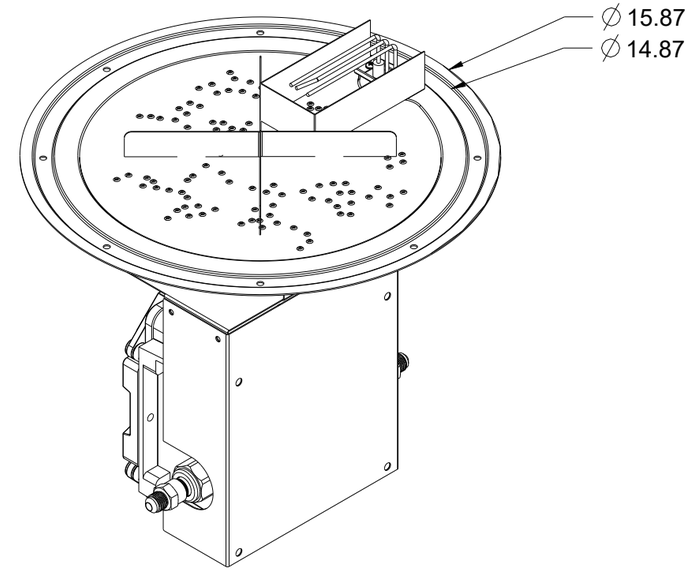


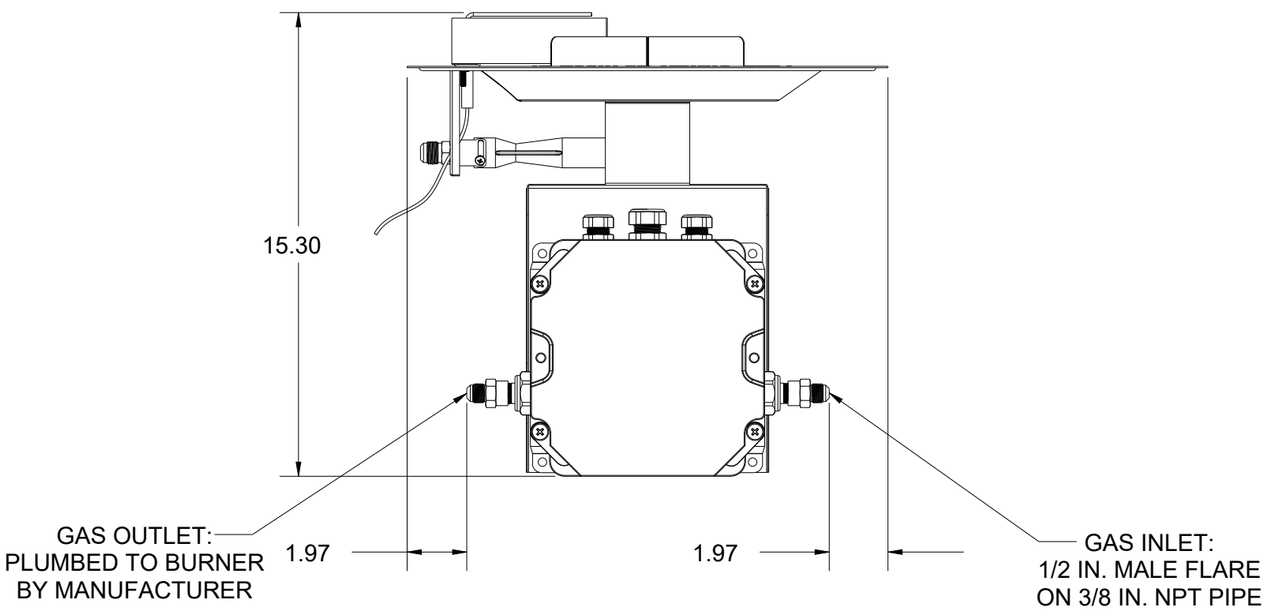


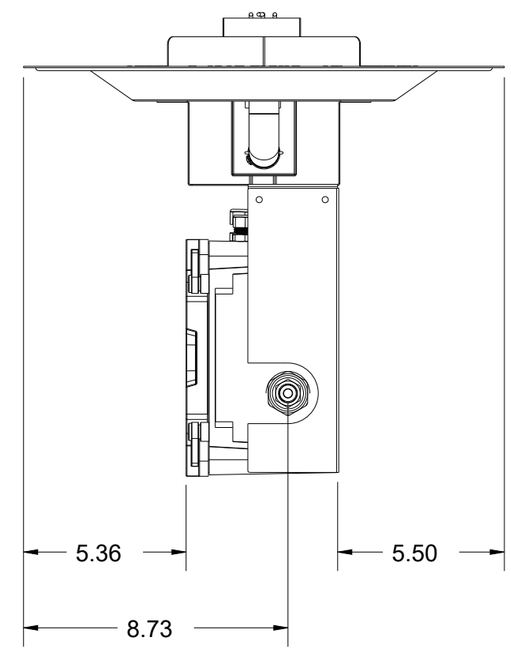


| REV | ECR | DATE | DESCRIPTION |
|---|---|---|---|
| | | | |
| | | | |
| | | | |
| | | | |
| | | | |
| | | | |

UNLESS OTHERWISE SPECIFIED

TOLERANCES:

DECIMALS: X.X ±.06 X.XX ±.03 X.XXX ±.015
ANGLES: X.X ±1°

MATERIAL/THICKNESS: 304 STAINLESS STEEL / 20 GA. (BURNER)

DRAWN BY: CB
DATE: 7/24/19

FINISH: NONE (2B)

PART NUMBER: BI16-DSI

REV.LEVEL: A

SCALE: .250

**THE OUTDOOR GREATROOM COMPANY**

PART NAME: CRYSTAL FIRE PLUS ROUND BURNER INSERT WITH DSI SYSTEM: 16 IN. DIAMETER