AQUAPERLA

BATHROOM ACCESSORIES

SPECIFICATIONS

Recommended use	Domestic, hotel and commercial	
Colour availability	Chrome/Black	
Accessory options	Single towel rack	Robe hook
	Double towel rack	Soap dish
	Towel holder	Glass shelf
	Towel Hook	Toilet brush and holder
	Toilet roll hook	

CLEANING RECOMMENDATIONS

This product should not be cleaned with abrasive materials. Damage caused by any improper treatment is not covered by the product warranty - refer to Warranty Conditions on the last page.

Disclaimer: Products in this specification manual must by regulation be installed by licensed and registered trade people. The manufacturer/distributor reserves the right to vary specifications or delete models from their range without prior notification. Dimensions are nominal measurements only. Dimensions and set-outs listed are correct at time of publication however the manufacturer/distributor takes no responsibility for printing errors.

BATHROOM ACCESSORIES

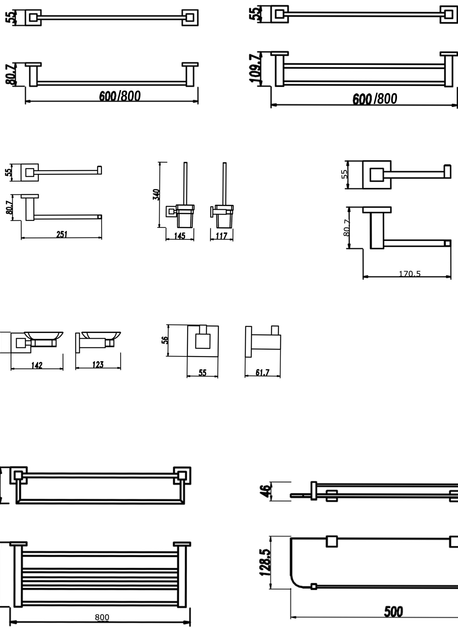

BATHROOM ACCESSORIES

AQUAPERLA PRODUCT QUALITY GUARANTEE

You have purchased a quality product from AQUAPERLA. This product is covered by a 10 years ceramic disks and parts warranty.

10 YEARS WARRANTY

This warranty covers faults in the product construction, material and assembly,first year onsite labor and parts. Products which are within 10 years from the date of purchase, found upon inspection by an authorised AQUAPERLA representative, to be defective in construction,material or assembly, will be repaired or exchanged with an equivalent product free of charge. Replaced items become AQUAPERLA's property.
All replacement products will be sent to customer without charge after contact us for warranty, or collect in our warehouse as agreed between the customer and AQUAPERLA.

Spare Parts

Cartridges and parts which are within 10 years from the date of purchase found upon inspection by an authorised AQUAPERLA representative to be defective in construction, material or assembly, will be replaced free of charge.

Warranty Conditions

This warranty will apply only under all of the following conditions:
- The item has been installed by a licensed plumber
- Failure is due to a fault in the manufacture of the productProof of purchase (including the date of purchase) is pro-vided
- The installation of the product is in accordance with the instructions provided
- This warranty does not cover products purchased as an ex-display without being fully checked and tested for sale by the manufacturer.

This warranty does not include faults caused by:
- Unsuitable or improper use
- The purchaser has attempted to modify or repair the product
- Incorrect installation or installation not in accordance with the instructions provided
- Installation or part installation by the purchaser or any person other than a LICENSED PLUMBER or tradesperson licensed to install this product.
- Normal wear and tear
- Inadequate or complete lack of maintenance
- Chemical, electrochemical or electrical influences
- Harsh detergents or abrasive cleaners used on product finishes

EXCLUSIONS

To the fullest extent permitted by law, AQUAPERLA excludes all liability for damage or injury to any person, damage to any property, and any indirect consequential or other loss or damage.

CLAIM PROCEDURE

For all warranty queries customers are to contact the branch where the product was purchased. These details can be found on your purchase invoice.

Our goods come with guarantees that cannot be excluded under the Australian Consumer Law. You are entitled to a replacement or refund for a major failure and for compensation for any other reasonably foreseeable loss or damage. You are also entitled to have the goods repaired or replaced if the goods fail to be of acceptable quality and the failure does not amount to a major failure.

Plumbers/Constactors, please ensure a copy of the installation instructions is left with the end user for future reference.
Don't risk it. use a licensed plumber!