DRAWING	VERSION: A1

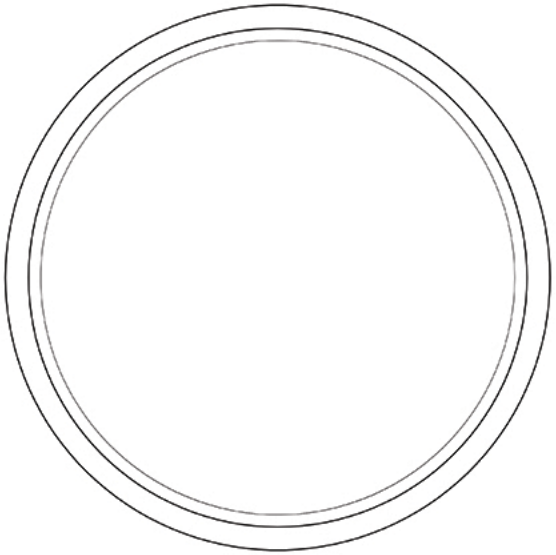

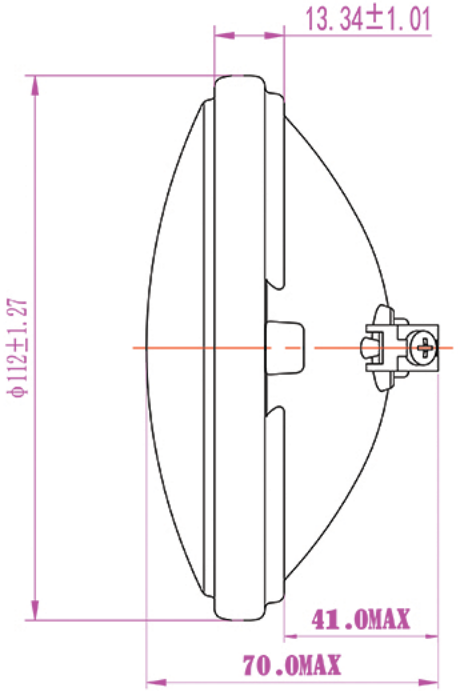

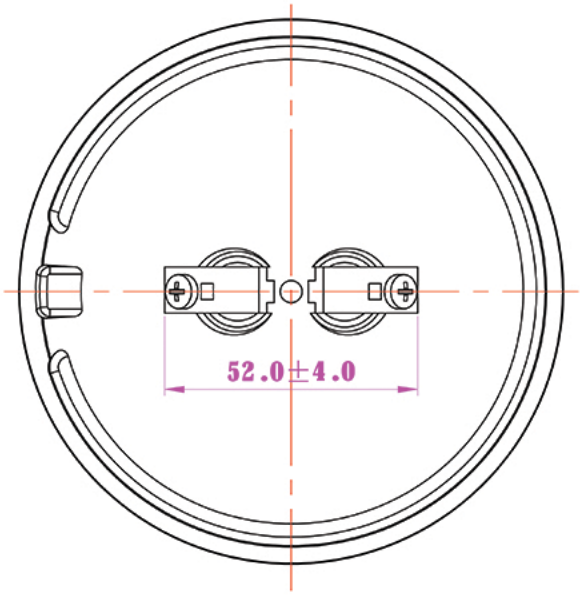

Item No.	4515(H)
Shape	PAR36
Volt (V)	6.4
Watt (W)	30±2
Base	2 Screw Terminals
AIPBCP (cd) AVG.	≥55000×80%
Average Life (H)	100 Hours @6.4V
Filament	C-6
Color	Clear
Spread to 10% Horia.× Vert.	5±3/5±3
Mol (mm)	70 max.
Dia (mm)	114

Mark	Place #	Partition	File Number	Siganture	Year / Mo / Day	4515 6.4V 30W	PAR36
Design						Stage Marker / Weight / Proportion	
Mapping	M Hanry	2019. 06. 04				1:1	
Audit	M Hanry	2019. 06. 04					
Approved	Z Charlie	2019. 06. 04				1 out of 1 pages	