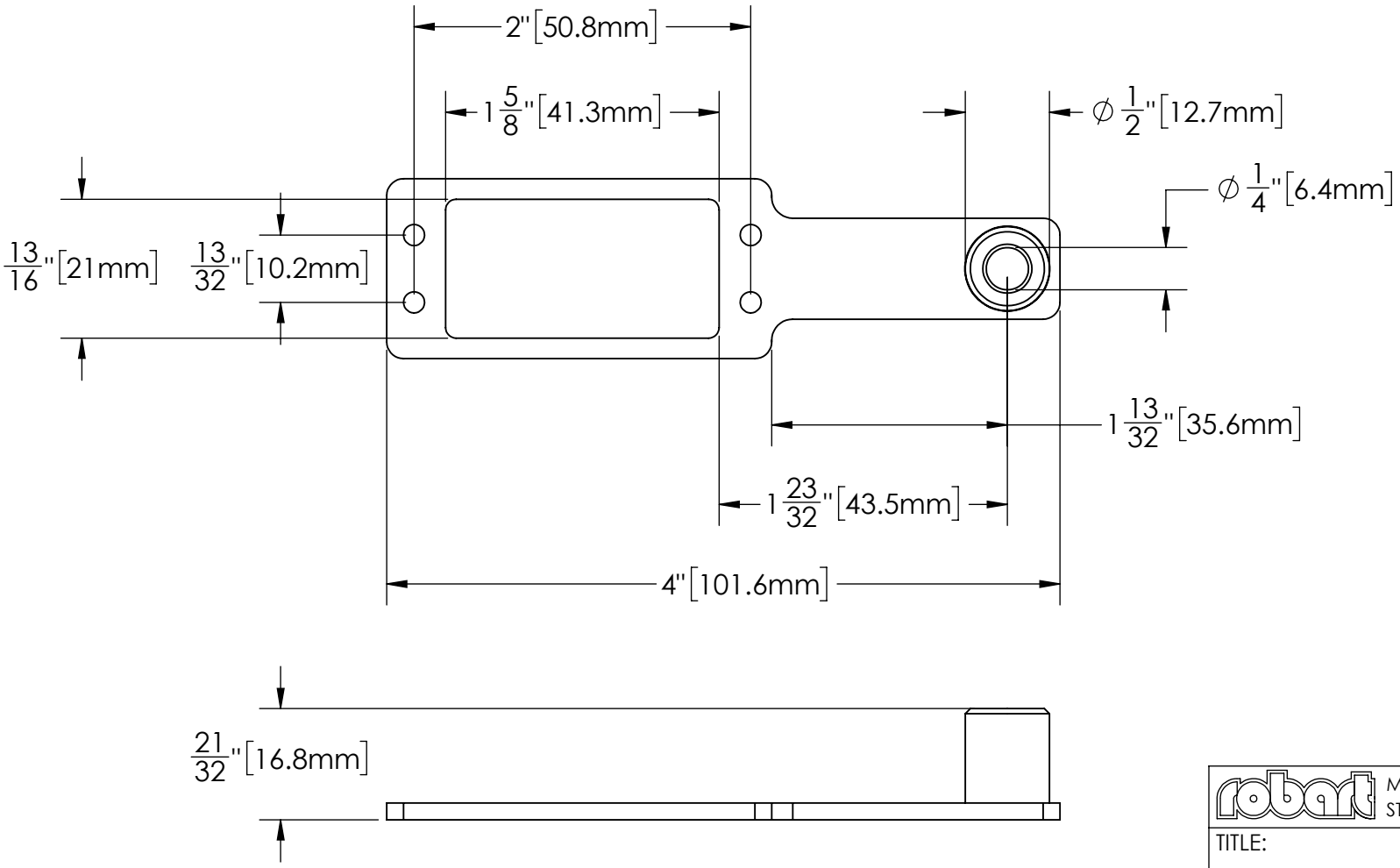

MFG. INC. 625 N. 12TH STREET
ST. CHARLES, IL. ROBART.COM

TITLE:

SERVO MOUNT BUSHING ASSEMBLY

SIZE	DWG. NO.	REV
A	TRASP210A DIM	-

SCALE: 1:1 | SHEET 1 OF 1

	NAME	DATE
DRAWN	B.METZ	10/3/2016
CHECKED		
MFG APPR.		
Q.A.		

UNLESS OTHERWISE SPECIFIED:
DIMENSIONS ARE IN INCHES
TOLERANCES:
FRACTIONAL ± 1/32
ANGULAR: MACH ± BEND ±
TWO PLACE DECIMAL ±0.01
THREE PLACE DECIMAL ±0.005
FOUR PLACE DECIMAL ±0.0005

PROPRIETARY AND CONFIDENTIAL

THE INFORMATION CONTAINED IN THIS DRAWING IS THE SOLE PROPERTY OF ROBART MANUFACTURING. ANY REPRODUCTION IN PART OR AS A WHOLE WITHOUT THE WRITTEN PERMISSION OF ROBART MANUFACTURING IS PROHIBITED.

5 4 3 2 1