***AMERICAN SPECIALTIES**, INC.*
441 Saw Mill River Road, NY 10701
(914) 476.9000 • (914) 476.0688
www.americanspecialties.com

MODEL №:	045210A
ISSUED:	10/09
REVISED:	

RECESSED MOUNTED AUTOMATIC ROLL PAPER TOWEL DISPENSER

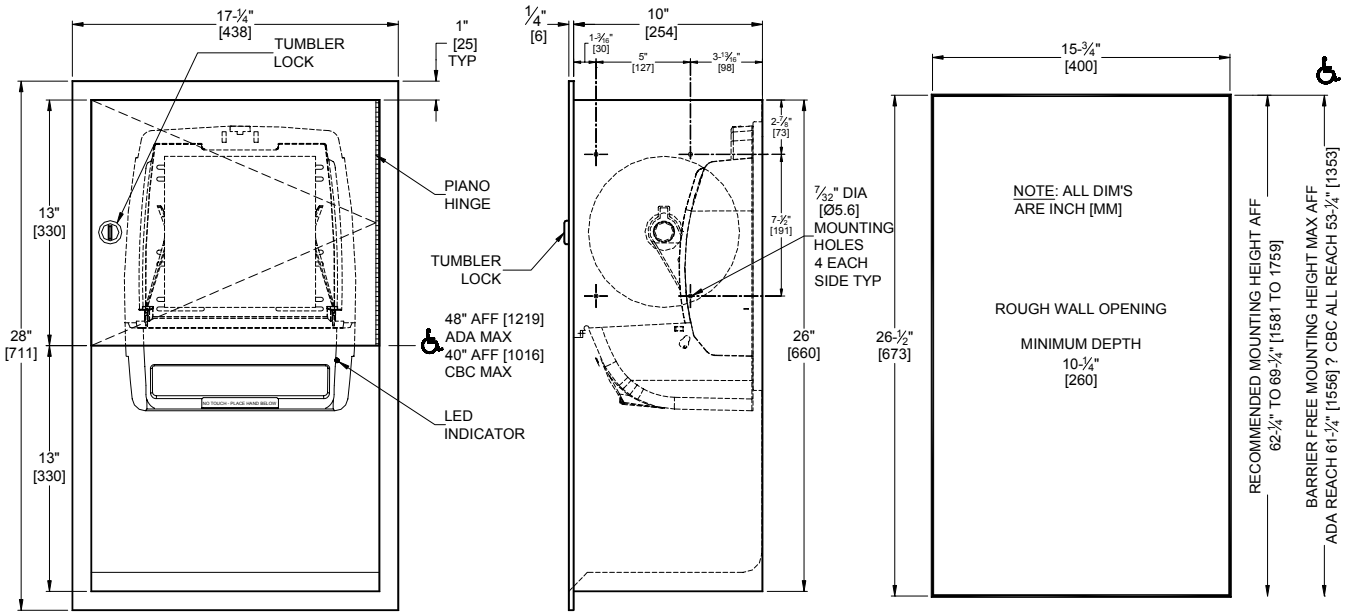

SPECIFICATION

Recessed Automatic Roll Paper Towel Dispenser shall hold and dispense one 8" wide x 8" diameter (203 x Ø203) standard towel roll up to 800 ft. (244m) long and one 8" wide (203) stub roll up to 4" diameter (Ø102). Automatic Touchless Roll Towel Dispenser shall be powered by four (4) D-size batteries (not supplied) and shall operate automatically to activate towel dispensing when hands are placed in sensor zone. Unit shall feed out a length of towel during each activation selected by owner by setting length, delay and paper saver switches. Unit shall have an internal towel cut-off bar. Cabinet and frame shall be fabricated of 22 gauge type 304 stainless steel alloy 18-8, and towel dispenser door shall be 18 gauge same grade. All exposed surfaces shall have satin finish protected by PVC film easily removed after installation. Door shall be attached to cabinet at side with a full-length 3/16" dia. (Ø 4.8) stainless steel multi-staked piano hinge and shall have a full return and hemmed bottom edge for user safety. Door shall be held closed with a tumbler lock keyed alike to other ASI washroom equipment. Face trim shall be 1" (25.4) wide formed from one piece with no miters, welding or open seams and have four (4) 1/4" (6.4) square returns to wall. Structural assembly of all components shall be of welded construction. Cabinet shall have no exposed fastening devices or spot-welded seams.

Recessed Automatic Roll Paper Towel Dispenser shall be Model № 045210A as manufactured by American Specialties, Inc., 441 Saw Mill River Road, Yonkers, New York 10701-4913

INSTALLATION

Unit is mounted in wall recess using № 10 self-tapping screws (by others) through concealed mounting holes provided. Note that top of RWO is 3/4" (19) below top of unit. For compliance with ICC/ANSI A-117.1-2003 and ADA Accessibility Guidelines, install unit so that top edge of towel dispenser opening is 48" (1219) maximum above finished floor (MAX AFF) only if clear floor forward reach or side reach access is provided. Be advised that local codes may require mounting so that top of towel dispenser opening is 40" (1016) MAX AFF (e.g. California UBC/Title 24). For general utility install unit with top of towel dispenser opening between 49" and 56" (1245 to 1422) AFF.

Rough Wall Opening (RWO) required is 15-3/4" W x 26-1/2" H x 10-1/4" D (400 x 673 x 260)

OPERATION

Towels are dispensed one length at a time automatically when hands are placed in sensor zone until supply is depleted. Length of towel dispensed is predetermined by owner by making selections on three (3) three-position switches for length, delay, economy. Unit may be reloaded with a full roll to automatically start when finished with an existing partial roll and will continue to feed properly when reloaded with a full roll and partial roll is transferred to stub roll position. Refill dispenser by unlocking door and replacing towel roll for an empty or partially empty unit. Dispenser supply is replenished and batteries are replaced manually on cycles determined by maintenance needs. LED indicates sensing and battery condition. Locking door prevents unauthorized access and roll removal.

THIS MANUFACTURER RESERVES THE RIGHT TO MAKE CHANGES IN DESIGN OR DIMENSIONS WITHOUT FORMAL NOTICE