ASSEMBLY INSTRUCTION MODEL NO:99146-CT

STEP 1

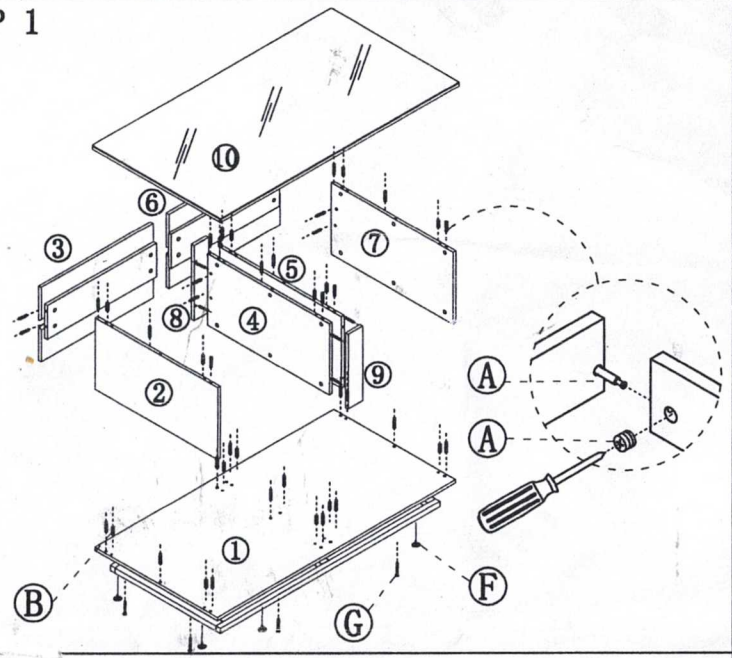

STEP 2

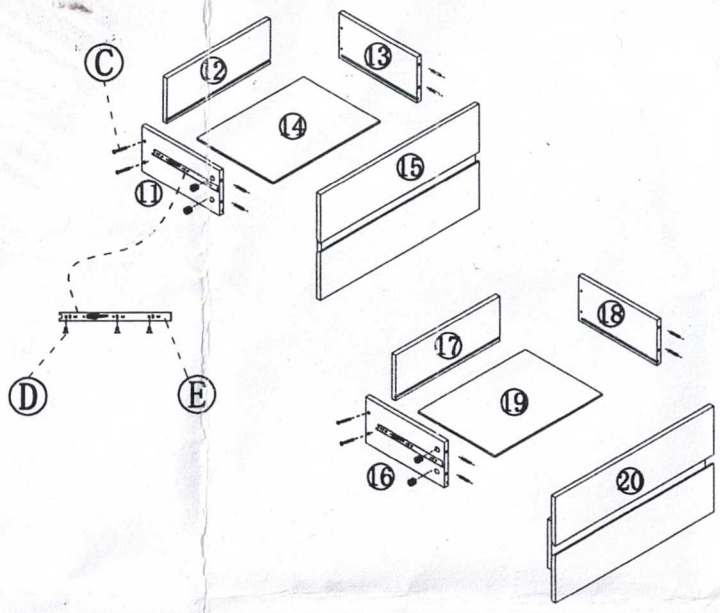

STEP 3

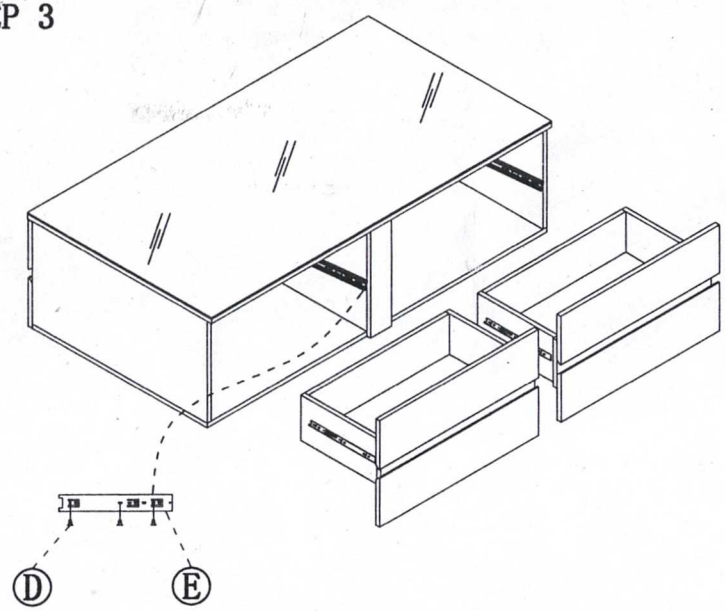

STEP 4

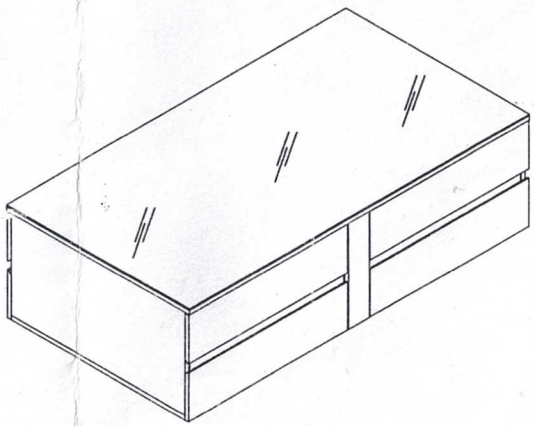

FITTINGS

NO:	PATTERN:	SIZE:	QTY:
A			55
B		Φ8×30	16
C		M3.5×30	18
D		M3.5×14	16
E			2
F			6
G		M3.5×25	8