Shadow™ Sled

STEADICAM®

SHADOW™

p/n LIT—257010-A

A Guide to the Manual

Thank you for purchasing the Steadicam® Shadow™ stabilizer, a heavy-duty, versatile rig that will serve you well for years to come.

This manual is written for experienced operators. If you are unfamiliar with Steadicam® stabilizers, or if you have never taken a Steadicam® workshop, we strongly urge you to take one of our professional workshops.

For more information on workshops worldwide, contact The Tiffen Company.

Included with this Shadow™ Overview Manual are other "modular" manuals specific to the equipment your purchase. Additional or replacement manuals may be downloaded from www.steadicam.com.

Note: For an in-depth tutorial on the equipment and Steadicam® operating, please refer to "The Steadicam® Operator's Handbook" included with your sled. The book can also be purchased separately.

The Tiffen Company takes great pride in producing the best inertial stabilizers in the world.

The

SHADOW™

stabilizer continues our tradition of excellence and innovation, filling the need for a heavy duty, high performance, and low-cost rig. The Shadow™ is a system that can evolve with you, with upgrades and accessories to expand its reach.

Like all our models, the Shadow™ stabilizer is designed to be user-friendly, field-serviceable, tool-free, straightforward, and versatile so the operator can quickly and easily configure the sled, arm, and vest to the best advantage for each shot. Change the sled length, balance, inertia, and go to low mode in a heartbeat, all without tools, extra parts, or fuss and bother. Solid, versatile, and fast – with the Shadow™, stabilizer system it all happens on the set like magic.

Overview

The base Shadow™ stabilizer system starts with a sturdy, 2 section, telescoping carbon fiber post coupled to the Ultra^2 stage – with our patented +/– 20º tilt head – and terminates in a new solid base. It comes standard with the Ultra^2 Gimbal, SD LCD Color 700 nit monitor, dual monitor mounts, frameline generator, on-screen artificial horizon, and a dual battery mount for 12 and 24 volts (either V-Lock or Anton Bauer). Included in the base package is the G-70 Iso-Elastic Stabilizer Arm, Ultra^2 Vest, Docking and Balancing bracket.

Options for the Shadow™ stabilizer include our patented ***"go-to" motorized stage*** (plug and play) and a variety of monitor choices, plus batteries, chargers, cases, cables, vehicle mounts, and other professional accessories. Visit www.steadicam.com for more details.

The two section, carbon fiber ***Telescoping Post*** extends the sled from 29 to 49in (74-125mm), for short to long mode shooting. Inside the post is the patented curly-cable system – with discrete, 14 and 28 volt lines for sustained high-amp capacity (14 gauge wires!), plus separate, dedicated and un-interrupted HDSDI and HD component coax cables, plus composite video in and out.

On the stage, the ***Wide Dovetail Lock*** has a broad grip on the dovetail plate, and the handle has a safety stop to prevent accidental release.

The ***Integral Tilt Head*** preserves dynamic balance with the lens angled +/– 20º – perfect for long mode or whip pans. The tilt head also maintains high or low lens heights, and helps with clearance, reach, or viewing problems.

The heart of the system is the ***Ultra^2 Gimbal*** - the smoothest, most precise gimbal ever made, with heavy duty, high precision bearings and an ergonomic yoke. Operators can use "The Blue Whale" tool to precisely center the gimbal in the field, even after years of hard knocks.

The post, monitor, and gimbal's ***Low-Profile Clamps*** are either open and free for easy adjustment, or positively locked, with a snap-over-centers clamping action. The clamp lever is ergonomically recessed into the clamp bodies, so nothing sticks out to snag on a cable or interfere with your grip.

The Shadow™ stabilizer's smaller electronics box continues our exclusive narrow sled base design and adds a user-freindly front connector panel, a one button artificial horizon, and electronic frame line generator.

The ***Structural Dovetail Base*** solidly mounts gyros, Antlers™, or other accessories. There are two positive clamps for the battery rods and a pull out mounting plate for accessories.

The monitor and the battery pack are adjustable in, out, and vertically over a wide range, giving the operators great choices for viewing, balance, and inertial control. The ***Tilting Battery Mount*** can be angled over 180 degrees for maximum flexibility. Pan inertia can be adjusted from a super-whippy 130 pounds per inch^2 to an amazingly stiff 2,564 pounds per inch^2 (0.9Mpa - 17.7Mpa) – or even more if the weights are added to the monitor or battery rods.

The great fitting ***Ultra$^{2®}$ Vest*** is a perfect complement to the Shadow™ stabilizer sled. The super-stiff adjustable spar, "Double Vee" shoulder clips, improved padding, and over-center ratcheting buckles make the vest superbly ergonomic, lightweight, and unobtrusive. And the Ultra$^{2®}$ Vest still has the world's best quick-release system for safety.

The tool-free, super smooth ***G–70x™ Arm*** lifts from 12 to 70 lbs (5.4-32 kg), yet is lightweight - only 11 lbs (5kg). The patented "Geo" feature alters spring geometry as it booms up and down to make the G-70™ the smoothest, most well behaved arm ever, throughout its astounding vertical range of 29in (74cm)! The "Ride" knob alters iso-elasticity, so for the first time, users can precisely set how the arm behaves, regardless of the weight carried. The new tool-free arm post holder is quick and positive, and its independent drag control delivers the precise rotation resistance desired – from completely free to totally locked, even when changing posts. At the other end of the arm, the new "kick-back" link reduces clearances and keeps the arm from banging against the operator on the run.

All of the above features are integral to the Shadow™ stabilizer design, ready to be used when needed. The Shadow™ stabilizer continues the Ultra™ tradition – as the most versatile and user-friendly Steadicam® model ever made. It lets one operate with minimum effort and maximum precision for every part of every shot. The sled is configured as desired: short, long, whippy or slow. The Shadow™ stabilizer is a cost-effective, heavy-duty "big rig" – the key to high-performance operating.

The Shadow™ Sled

Post #1 - connected to the electronics
Post #2 - connected to tilt head & carries the gimbal


Camera mounting platform
Side to side adjustment knob
Stage electronics
Tilt head and clamps
Docking ring
Gimbal
Gimbal clamp
Monitor bracket
PowerCube™ Batteries
Electronics module
Battery rods
Integral dovetail base

Accessories

The Shadow™ standard package includes the sled, with a non-motorized Ultra²® stage, V-lock battery mount, 7in monitor, and an accessory package, lightweight Ultra²® vest and the G-70x™ arm.

*Supplied Accessories**

	part number
Camera mounting dovetail	252-7410
Blue Whale gimbal tool	800-7114
Hard Case for sled	011-0355
Ultra²® vest	800-7800-02
Soft vest bag	078-5237
G-70™ arm	800-7200-05
Soft arm bag	078-5236
G-70™ anti-backlash tool	802-7265
T-handle	
1/4” Allen wrench	MSC-093260
Docking bracket	250-7910
Stabilizing system:	
3 ft video cable	078-4122-01
12v accessory cable	250-0045
24v Power cable,	
open end	250-0046
Pot adjust tool	MSC-104216
Camera mounting screws	
1/4-20 and 3/8 - 16	078-1121/078-1122
EFP instructional video	DVD-200504
Warranty form	LIT-077200
Steadicam® Operator’s Handbook	LIT-900000

*Supplied Accessories are subject to change without notice.

Recommended Accessories & Upgrades

Motorized stage	
Gimbal transmitter	800-7150
Gimbal battery recharging cable	800-0101
1 lb. weights (6)	800-7970
Spare 3 ft video cable	078-4122-01
2 spare 12 ft video cables	
Spare 12v accessory cable	250-0045
2 each of all camera	
power cables you will use	various
2 HD component cables: camera to sled	
2 HD component cables: sled to monitor	

Hard case (vest and arm)	011-0330
PowerCube™ Batteries	FFR-000053
IDX VL-4S battery charger	FFR-000008
Battery hard case	011-0368
Bag, tool kit	FFR-000013
Allen wrench pocket tool	MSC-150890
Screwdriver	MSC-191115
Saddle bag/sand bag	FFR-000014
Steadicam® logo cap	FFR-000021
Spare ratchets with hardware	
Slanted F-bracket & safety pin	252-7906
Low mode handle clamp	078-7393-02
12in long arm post	800-7204-01
6inlong arm post	800-7204
Camera mounting dovetail	252-7410
Ultra²® rod weight (requires 2)	800-7617
Follow focus rod mounting hardware and rods	250-7915
Tape measure	
Many spare 1/4-20 and 3/-16 camera screws	078-1121/078-1122
Mitchell mount adaptor	800-7902

More stuff you might need

Wireless follow focus system and brackets
Video transmitting and receiving system
Wired zoom control system
Camera specific low mode brackets
Inertial augmentation (Antlers™ or Gyros)
Video recording system

See www.steadicam.com for a complete list of all available accessories.

Cases & packing

When repacking the sled into the case, Insert the monitor first, with the rods angled up. Be sure that the sled length and gimbal position are properly set so that the sled drops freely into place, then rotate the monitor rods down into their final position.

Many operators cut the foam to accommodate accessories kept on the sled - such as a focus motor receiver or a small VCR. A long, thin razor blade works fairly well to cut the foam, as does a serrated knife.

The hard sled and vest cases have wheels and a retractable handle.

Soft bags are provided for the arm and for the vest, but you should also use the hard case when shipping your gear. Many other accessories are shipped in the battery case. Most operators have several other cases for their accessories, tools, low mode brackets, video recorders, video transmitters, diversity receivers, remote focus equipment, etc.

The Tiffen Company, 90 Oser Avenue, Hauppauge, NY 11788
631-273-2500 • 1-800-645-2522 • www.tiffen.com
Tiffen Steadicam Operations, 2815 Winona Avenue, Burbank, CA 91504
Phone: 818-843-4600 • 818-843-8321

800-7400 Stage: Ultra²®/Shadow™

p/n LIT-257010-B

STEADICAM®

Stage mechanics and adjustments

The dovetail clamp lever has three positions: forward and locked, 90º for adjustme™nts, and 60º back for mounting or removing the dovetail plate. A safety button must be pushed to move the lever to the unlocked position; the same button holds the lever fully open, making flips to low mode and back a bit easier. Do not force the lever backwards beyond its stop.

Even with a very wide camera, the clamp lever can always be accessed, but the safety release button might require a thin screwdriver.

The stage is easy to adjust. The knob at the right rear controls fore-aft, and the two knobs on the side control side to side movement.

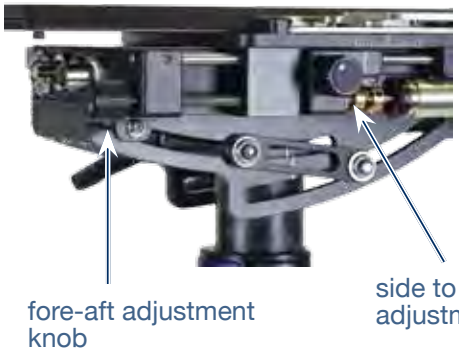

The motorized stage is position sensing – much like a focus motor system for a lens. One use of this feature is to set the stage to the center of travel, both fore-aft and side to side – great for initial setups.

Pushing the double pole momentary switch on the “nosebox” to the “C” side centers the stage.

Flipping the switch the other way (“L”) sets the stage to a pre-programmed position (more about that later.)

The speed and direction of the motors is set by the switches and thumbwheel pots on the left (port) side of the nosebox. Note that the motor direction switches also have a center-off position, just in case you are in an odd RF environment or you don’t want your stage motors to move. Remember this “function” when a stage motor stops working between takes!

The electronics in the stage and nosebox are on “plug and play” circuit boards, easy to upgrade or replace (if there’s ever a problem).

The stage connectors

At the rear of the stage, left to right (port side to starboard side):

- Camera power connector. 3 pin Lemo, +28VDC, +14VDC, and ground.
- HDSDI in. This connector has no connection to the distribution amplifiers or DA's. BNC
- HD component video in. 6 pin Lemo
- Standard definition (PAL/NTSC) composite video in. BNC

At the front (nosebox), left to right:

- Power for focus motor receiver/ amplifiers. 3 pin Lemo (+28VDC, +14VDC, and ground)
- Stubby black antenna (no connection, just thought you'd like to know what it was)
- Tally light connector (additional functions possible)

Nosebox starboard side:

- Pot to adjust Tally sensor sensitivity
- Rotary switch to set remote channel (0-8)

Forward, flanking the stage:

- Starboard side:+12VDC (regulated) and video in. 4 pin HRS.

- Port side: +14VDC and video out. 4 pin HRS.

The 800-7400 (Ultra²®) stage on these pages is shown with an Ultra²®. It may look slightly different with another system, such as the Shadow™.

Note: See page 12 for pin outs and technical descriptions of the connectors.

Why the motorized stage is so important for precise operating

This is a crew member's view of the operator adjusting the precise balance of the sled using the wireless transmitter — a 3 second exposure! Really!!

For precise work, the sled must be carefully balanced or trimmed.

Before operators had the Tiffen's reliable and precise motorized stage, all balancing and trimming had to be done before the shot and therefore the system's balance was fixed. As well as that works, it was, as Garret Brown has often said, a situation akin to that of an airplane pilot landing his plane to adjust the flaps. We can do better.

With the motorized stage, the operator can continuously adjust the sled's balance during the shot — assuring the utmost precision for every moment.

Even for conventional, pre-shot balancing, it is much quicker and more accurate to maintain your posture and grip as you push a button to tweak the sled's balance, than it is to reach up, twist a knob, and wait for you and the sled to settle to a new attitude. The easier it is to tweak the sled's balance, the more likely it is that the operator under real-life production pressures can (and will) actually take the time to precisely balance his sled.

Some situations where the motorized stage really helps:

• Anytime you want to trim precisely and quickly, with no change in posture or grip. Includes trimming on the fly, in the middle of a shot, or holding an opening frame perfectly still.

• In long mode (and sometimes in standard low mode), it is often difficult or impossible for the operator to reach the stage to manually adjust the sled's balance.

• While shooting from a vehicle, it can be dangerous to let the sled go with one hand to adjust the sled's balance.

Removing the remote

Whenever you want to hand the remote off to your assistant (or charge the remote's battery), unscrew the knurled ring.

The remote is held in place by two sets of pins. The forward set of pins slips into two small holes, and the rear set of pins are captured in a groove in the knurled ring.

When returning the remote to the handle, insert the pins carefully and do not force anything.

If you want, you can remove the pins and just Velcro the remote to the handle. A half-moon™ filler plate is supplied with gimbal so that if the remote is removed, the filler can take its place.

Charging the remote

If the transmitter's battery is low, the LED will blink continuously after any button is depressed. To charge the remote, remove it from the gimbal handle. Plug the supplied cable into the remote and the other end into any one of the three 4-pin HRS connectors on the sled.

Leave the sled on as you charge the battery. It takes about 5 hours to charge a completely discharged remote battery. When the battery is charging, the green LED will be on. When the lithium-ion battery is fully charged, the green light goes off.

If plugging in a fully charged transmitter, the LED will remain lit for approximately ten minutes until the charge circuit determines the battery is actually full.

Battery life can vary depending on how often the transmitter is used and the storage and operating conditions.

Changing the frequency

To avoid interference with other systems, 1 of 8 channels can be selected via the rotary switch on starboard side of nose box.

The remote and the receiver must be on the same channel. Simultaneously holding down the top 2 go-to buttons for 6 seconds will enter the remote into a channel change mode. The number of LED blinks will correspond to channel selected.

Change channels by pressing the fore or aft remote buttons (channel up or down). After the proper channel is selected, the programming mode will time out after 9 seconds and re-flash the selected channel number. Channel 0 corresponds to 8 flashes.

(For operation outside of the USA) To select between US and UK frequency operation, there are two jumpers that must be changed. One jumper is inside the nosebox, the other is inside the remote. They must match for the system to work. The jumpers are set at the factory at the time of shipping. (902 – 928MHz US and 868 to 870MHz UK)

The green "PWR" LED on nose box comes on when the CPU is operational.

Ergonomics

regular

The remote control is ergonomically designed, and it rotates to any angle for your comfort, whether you operate normally or goofy-footed.

goofy

Low mode: Typically, the remote is upside down in low mode. You can also orient the remote for better low mode operation.

To angle the remote, loosen the small set screw in the curved handle of the gimbal.

Orient the remote by screwing the curved handle in or out. If the handle is too far in, you can't easily remove the remote via the black knurled ring, and you might have to back the handle off one full turn. Loosening the setscrew a lot further and unscrewing the handle is also how you access the "tilt" bearings and shaft for cleaning.

For goofy foot operators, the remote can be inserted upside down keeping the go-to buttons on the "thumb side." You might, however, prefer accessing the go-to buttons with your index finger: i.e., orient the remote as you wish.

“Go-to” Buttons and the Smart Motorized Stage

On the remote control, there are three “go-to” buttons on one side in addition to the four original “trim” buttons (as well as two other “spare” buttons).

The go-to buttons move the stage to specific marks, defined by the operator. One position is usually the nominal balance, and the other two are programmed for some other part of the shot. During the shot, the operator (or an assistant holding the removable remote) pushes a go-to button to move the stage precisely to a new trim setting. Pushing the “home” button at any time returns the stage to the nominal trim. No more counting revolutions or so many seconds; the stage moves exactly where you want it to — and back.

In addition to big tilts and Dutch angles, you might set a button to “post perfectly vertical and in dynamic balance,” and use another button for the nominal trim for the shot at hand. Or set the three buttons to roughly account for the side to side movement of film in some magazines.

Programming is a snap. It’s just like programming the stations on a car radio. Move the stage to the desired position, either manually or using the traditional trim buttons. Then hold one of the go-to buttons down for three seconds. The green LED will flash twice, and it’s set. You can even program any button on the fly, during the shot, if you have the mental reserves...

Each go-to button simultaneously programs the fore-aft and the side to side position of the stage. Trimming fore-aft may slightly alter your side to side balance, or you may want to program in a severe Dutch angle. You can even program two or three buttons for the same trim if you like, so you don’t have to think about which button to push!

The positions are stored in non-volatile memory, so changing batteries or turning off the sled power does not erase your presets.

The center go-to button on remote shares the same preset as the “L” position on the switch on the nose box. The “L” position is programmed exactly like the center go-to button on the remote, and the red mode LED on the nosebox will flash to confirm programming.

The “C” button can be programmed the same way as the “L” button. It might be useful to reprogram the “center” position if you were working with a camera and the nominal balance was shifted significantly side to side. Then everytime you changed lenses or started the day you would not have far to go to rebalance side to side.

Holding one of the go-to buttons down for more than six seconds will clear all programming for that button and make it non-operational. The green LED will flash 3 times. It’s a good idea to clear out all 3 buttons at the beginning of the day.

The Tilt Head

The integral, low profile head is designed to alter the lens angle plus or minus 20 degrees from horizontal with only a minor shift of the camera's c.g.

The most important use of the tilt head is in normal operating. Instead of trimming even two or three degrees for a shot by altering the sled's balance, use the tilt head to preserve a perfectly vertical post and keep your sled in dynamic balance.

Trim for headroom

Without the tilt head, much of the benefit of getting the sled into dynamic balance is wasted when one alters the trim of the rig as much as a few degrees. For example, operators routinely trim their sleds for headroom. This action puts the rig out of both static and dynamic balance.

First, the operator determines the proper length of sled, optimal monitor viewing position, inertia, and lens height. Then the operator adjusts the camera to the nominal tilt angle for the shot.

Setting the tilt

The operator sets the tilt by releasing the two clamps and manually repositioning the camera to the proper angle.

Note: Don't grab the stage by the nosebox to adjust tilt. Be sure to loosen the arc clamps fully and grab the camera or dovetail plate. Don't force anything; it should move fairly easily.

The post remains vertical and the rig stays in (or close to) dynamic balance. Only minor static rebalancing is normally required, but exactly how much depends on the camera, accessories, sled length, monitor position, etc. In all cases, bringing the sled back into static balance by moving the camera will return the sled to dynamic balance as well.

The Tilt Head — General Operating

Even if the sled is slightly out of perfect dynamic balance, it's a whole lot easier to hold the post vertical than at any other angle, especially when panning and accelerating - which we tend to do a lot when operating. The tilt head keeps the post vertical in many situations, making it easier to operate and keep things level.

Another benefit of the tilt head: a whole new class of whip pans is now possible. All whip pans are done in dynamic balance with the post vertical. Previously this meant that the lens was always horizontal. With the tilt head, the lens can be angled up or down as much as twenty degrees and the operator can still make extremely precise fast pans. Using the tilt head will increase the precision of any pan with a lens angled up or down – fast or slow.

Long mode pans with the lens looking down - say at a crowd - used to be exceedingly difficult or impossible, due to the large spatial translations of the battery, monitor, and camera. But the tilt head leaves the post vertical and therefore eliminates this spatial translation, and makes these pans routine.

Low mode and very low mode pans are also much easier and more precise.

Maintaining Lens Height — Long Modes

As the operator tilts the sled, the precious super-high (or super-low) lens height gained with an extended telescoping post quickly disappears. The more one tilts, the more rapidly the lens height is lost.

Example 1:
Without a tilt head.

Example 1: Same shot, with a tilt head.
Note that the post is vertical, the lens is higher, and the monitor is in a much better viewing condition.

Example 2:
Without a tilt head. The monitor is in a really awkward position now; it even degrades the operator's form.

Example 2: Same shot, with a tilt head.
Again, the lens height is greater with the tilt head.

Other Applications

One of the more unusual applications of the tilt head is to angle the sled and its components relative to the desired position of the lens. Moving the sled relative to the lens might avoid casting shadows into the shot, seeing one's own feet, or prevent the sled from hitting something on the set.

REVISIONS					
BY	REV.	ZONE	DESCRIPTION	DATE	APPROVED
MW	A		PRODUCTION RELEASE	2/27/07	

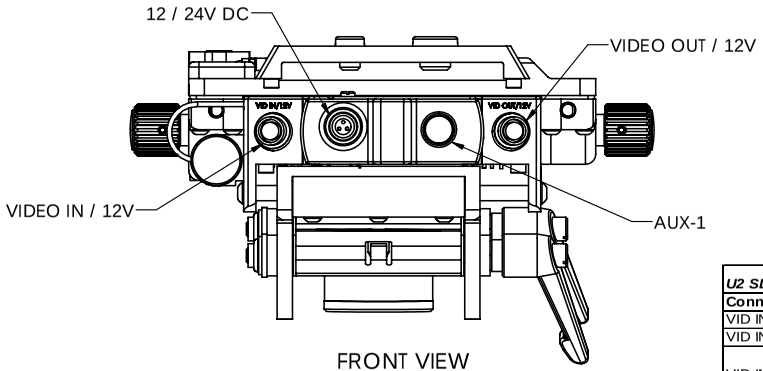

FRONT VIEW

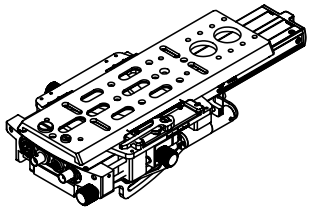

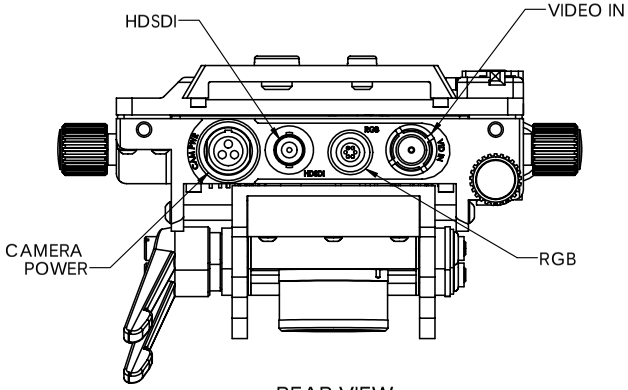

REAR VIEW

U2 SLED CONNECTOR DESCRIPTION				
Connector Label	**Connector Type**	**Pin #**	**Description/Function**	**Comments**
VID IN/12V	HIROSE HR10-7R-4S	1	PWR GND	See Note 4
VID IN/12V	HIROSE HR10-7R-4S	2	VIDEO GND	See Note 4
VID IN/12V	HIROSE HR10-7R-4S	3	COMP/GRN	Direct coax connection to RGB pin-1 and VID IN BNC. See Note 6.
VID IN/12V	HIROSE HR10-7R-4S	4	+12V	Regulated 12Vdc at 1A max.
VID OUT/12V	HIROSE HR10-7R-4S	1	PWR GND	See Note 4
VID OUT/12V	HIROSE HR10-7R-4S	2	VIDEO GND	See Note 4
VID OUT/12V	HIROSE HR10-7R-4S	3	VIDEO OUT	See Note 3
VID OUT/12V	HIROSE HR10-7R-4S	4	+12V BATTERY	See Note 1
CAM POWER	LEMO ECG.2B.303	1	PWR GND	See Note 4
CAM POWER	LEMO ECG.2B.303	2	+12V BATTERY	See Note 1
CAM POWER	LEMO ECG.2B.303	3	+24V BATTERY	See Note 2
HDSDI	BNC MALE	N/A	HDSDI VIDEO	Direct coax connection to HDSI BNC on sled connector panel. Isolated Video gnd.
RGB	LEMO EYG.1B.306	1	COMP/GRN	Direct coax connection to RGB pin-1, VID IN BNC, and VID 1N/12V pin-3 on stage. See Note 6.
RGB	LEMO EYG.1B.306	2	VIDEO GND	See Note 4
RGB	LEMO EYG.1B.306	3	RED VIDEO	Direct coax connection to RGB connector on sled connector panel.
RGB	LEMO EYG.1B.306	4	VIDEO GND	See Note 4
RGB	LEMO EYG.1B.306	5	BLUE VIDEO	Direct coax connection to RGB connector on sled connector panel.
RGB	LEMO EYG.1B.306	6	VIDEO GND	See Note 4
VID IN	BNC MALE	N/A	COMP/GRN	Direct coax connection to RGB pin-1 and VID 1N/12V pin-3 on stage. See Note 6.
12/24Vdc	LEMO EPG.0B.303	1	PWR GND	See Note 4
12/24Vdc	LEMO EPG.0B.303	2	+12V BATTERY	See Note 1
12/24Vdc	LEMO EPG.0B.303	3	+24V BATTERY	See Note 2
AUX-1	HIROSE HR212-10RA-8SDL	1	PWR GND	See Note 4
AUX-1	HIROSE HR212-10RA-8SDL	2	RESERVED	
AUX-1	HIROSE HR212-10RA-8SDL	3	RESERVED	
AUX-1	HIROSE HR212-10RA-8SDL	4	RESERVED	
AUX-1	HIROSE HR212-10RA-8SDL	5	RESERVED	
AUX-1	HIROSE HR212-10RA-8SDL	6	RESERVED	
AUX-1	HIROSE HR212-10RA-8SDL	7	TALLY SENSE	
AUX-1	HIROSE HR212-10RA-8SDL	8	RESERVED	
Note 1:	- 12V BATTERY VOLTAGE is sourced directly from battery voltage in 12V mode.			
	- 12V BATTERY VOLTAGE is sourced directly from DC-DC converter in 24V mode. (14.4 to 14.6Vdc at 100W max.)			
Note 2:	- 24V BATTERY VOLTAGE is sourced directly from two sled batteries connected in series.			
Note 3:	- Video source is determined by VDA DIP switches #1-8.			
Note 4:	- POWER GND and VIDEO GND can be connected by internally jumpering JP2-1 to JP2-2 on 800-0005 board.			
Note 5:	- 75 ohm termination switched via VDA DIP switch #10 when IN/OUT switch is set to IN.			
Note 6:	- 75 ohm termination switched via VDA DIP switch #9.			

NOTES: UNLESS OTHERWISE SPECIFIED

NEXT ASSY | USED ON
APPLICATION

UNLESS OTHERWISE SPECIFIED:
DIMENSIONS ARE IN INCHES AND APPLY AFTER PROCESS FINISH.
TOLERANCES:
FRACTIONAL ±1/64
ANGULAR: MACH ±1° BEND ±1°
TWO PLACE DECIMAL ±.01
THREE PLACE DECIMAL ±.005
CONCENTRICITY: .003 T.I.R.
BREAK SHARP EDGES: .005 - .030
MACHINED FILLETS: .003 - .005 R.
INTERPRET DRAWING PER ANSI Y14.5M 1982
DO NOT SCALE DRAWING

	NAME	DATE
DRAWN	MW	2/27/07
CHECKED	-	-
ENG APPR.	-	-
MFG APPR.	-	-
Q.A.	-	-

COMMENTS:
FILE NAME: 800-7400-XX

TIFFEN®
6933 San Fernando Rd. Glendale, CA 91201
Phone: 818-843-4600 Fax: 818-845-8129

TITLE: CONN. PIN-OUT DIAGRAM STAGE, ULTRA2

SIZE C | DWG. NO. DOC-800740 | REV A
SCALE: 1:1 | WT: | SHEET 1 OF 1

TIFFEN®
Helping Create the World's Greatest Images™
The Tiffen Company, 90 Oser Avenue, Hauppauge, NY 11788
631-273-2500 • 1-800-645-2522 • www.tiffen.com
Tiffen Steadicam Operations, 2815 Winona Avenue, Burbank, CA 91504
Phone: 818-843-4600 • 818-843-8321

Posts & Clamps: Ultra²®/Shadow™/Clipper™

The images, features, and descriptions are taken from several Steadicam® models and all may not be applicable to the model you have purchased.

p/n LIT-257010-C

STEADICAM®

Posts and clamps

The sections of the telescoping post are adjusted by opening a blue lever, releasing the clamp at the bottom of the outer post.. Be sure to support all sled portions that will be freed before you release the clamp. This style of clamp is either completely clamped or free, so don't force the lever further open than shown.

Do not extend any section beyond the point where the yellow alignment line becomes red.

Do not twist the bottom section more than 180 degrees from the top section as this will also twist the internal cables. If you think you may have inadvertently twisted the internal cables, remove the camera and battery and make the rig as short as possible. Release the clamp and slide the bottom section (the electronics) completely off. Examine the curly cord. The two rubber tubes that support the wires should be parallel and not twist. Rotate the bottom section until the rubber tubing is not twisted, and put the sled back together.

> Note: There is no safety line inside the 3 or more section posts to keep them from separating, but there are electrical wires inside the post that will keep the rig parts together. The longer the rig, the more these wires will act like a safety line, but don't rely on them.

Typical extension of bottom retractable 2-section post

While holding the upper post, release the post clamp and the bottom of the post. Then stabilize the lower post and lift up on the upper post. Once you have extended the post, close the post clamp. (See photos below.)

Locking the post clamps

The post clamps are positive locking, snapping shut with a sharp click.

Do not force the lever further open than shown, as this can damage the mechanism.

It's always good practice to give the rig a whip pan and hard stop to be sure nothing shifts.

If something shifts, the clamps are easily tightened with a small Allen wrench. Adjust the screws with the lever closed — go slowly — 1/8th of a turn or less at a time. Tighten both screws equally, so the clamp remains parallel to the housing. If the screws are over-tightened, the lever may not open or close. Test the clamp strength and lever action frequently as you adjust the tension.

Accessing the Post 2 to 1 clamp (4-post sleds only)

Sometimes it's difficult to get a finger between the tilt head and the clamp lever if the upper post is fully collapsed. In order to get the sled to its absolute minimum length – fighting for every inch – we decided to allow the clamp to ride up "into" the tilt head, where it just fits.
You can always tilt the head fully upwards to get at the clamp, or, as it takes very little force to open the lever, use a small wooden or plastic tool to pry open the lever. An assistant's orange stick or a small plastic screwdriver works well.

However, unless the camera is very heavy or you need the sled as short as possible, we suggest that you normally set up the sled with the upper post extended about a .5in (13mm) or so, which makes the clamp lever accessible with your finger.

Maintenance

The Steadicam® sleds use several different toolfree clamps. Although they all come pre-adjusted at the factory, they will have to be adjusted from time to time. The key thing is to tighten the clamps a little at a time; a small change in a clamp's adjustment can produce enormous changes in the pressure on the parts. In general, the clamps should be just tight enough to work.

Use a 3/8ths inch open end wrench to tighten or loosen the lock nut for the monitor rods clamp.
Tighten or loosen in 1/8th of a turn or smaller increments, testing often both for the clamp's holding strength and for the action of the lever.

Monitor Mounts

Moving the monitor on the 2-post sled.

Monitor mounts

There are two monitor mounts on the multi-post sleds. The two mounts are identical, and permit a large vertical range of monitor positions. The second monitor mount can be used for securely mounting a gyro, recorder, second monitor, etc.

Inserting the monitor mount

Align the parts parallel and squarely to each other. Note that the bracket is inserted half-way to start, rather than from above and trying to slide down the whole way from the top. The safety pin automatically retracts as you align the parts, and clicks to lock when the parts are aligned. Tighten the Kipp® handle hard to secure the monitor bracket.

Ultra2™

Clipper™ 312/324

Shadow™

Accessory shelf

Tucked inside the base of the sled is an accessory shelf for mounting extra monitors and recording devices.

The shelf is adjusted by removing four screws.

The Tiffen Company, 90 Oser Avenue, Hauppauge, NY 11788
631-273-2500 • 1-800-645-2522 • www.tiffen.com
Tiffen Steadicam Operations, 2815 Winona Avenue, Burbank, CA 91504
Phone: 818-843-4600 • 818-843-8321

TIFFEN®
Helping Create the World's Greatest Images™

Gimbal: Ultra²®/Shadow™

p/n LIT-257010-D

STEADICAM®

The gimbal

The Ultra²® gimbal (also used on the Shadow™ series stabilizer) uses high-precision and high load bearings, and the body, yoke, and handle are precisely registered to each other. The yoke's shape and contoured edges extends the range of motion without interference and promotes a better operating grip over a wider range.

The operator can easily center the gimbal in the field – useful if you've taken apart the gimbal for cleaning, taken a really bad bump, etc.

Note: You might notice that there is a small amount of in and out "play" between the handle that holds the remote and the Y shaped yoke. This is part of the gimbal design and is normal. In use, the play disappears.

Centering the gimbal

• Place the gimbal on the docking stud (as you would for normal balancing), give yourself a 3 to 4 second drop time, and aim the camera along a line through the two bearings in the yoke, as shown in the left photo.

• Balance side to side and fore-aft as precisely as you can to get the post vertical. We recommend you use a bubble level on the stage, and be sure that the tilting head is set 90º to the post (horizontal). Rotate the sled 90º so that the camera is aimed at along the axis of the yoke handle, as shown in the right photo, above. Tweak the fore-aft balance as precisely as you can, then do not touch the stage adjustments for the rest of the procedure.

• Rotate the sled 90 degrees again, as shown below, and test for level. Rotate 180 degrees and test for level. If the sled is level, great. If not, use the "blue whale" tool to loosen one of the two end caps 1/16 of a turn or so, and tighten the other one to the same degree.

• If the sled does not hang perfectly level, move the whole sled "uphill" with the yoke bearings.

• If it gets worse, you chose the wrong one to loosen! If it gets better, keep going until it is perfect. Do not rebalance fore-aft with the stage.

Adust the yoke bearings equally – i.e. loosen one and tighten the other the same amount - and do it in small increments.

Tip: We urge you to test your gimbal's centering with a normal drop time, and then with progressively longer drop times. Go slowly and follow the procedure closely, rebalancing carefully and testing everything as you go. Before you adjust anything, be sure it's not your balancing technique that is causing the problem, or a dangling cable, anything loose on the sled, or the wind. With long drop times, the sled is very sensitive to these shifts and influences.

Blue Whale Tool

A small warning: do not over-tighten the caps against the bearings, as this will cause binding. Just tighten each cap down to touch the bearing. If the bearing starts to bind, just back off one of the two end caps until the gimbal is free again. The blue whale tool also makes it easy to take apart and clean the gimbal if this ever becomes necessary.

The Tiffen Company, 90 Oser Avenue, Hauppauge, NY 11788
631-273-2500 • 1-800-645-2522 • www.tiffen.com
Tiffen Steadicam Operations, 2815 Winona Avenue, Burbank, CA 91504
Phone: 818-843-4600 • 818-843-8321

Set Up

p/n LIT-257010-E

STEADICAM®

General Set Up & Balancing

NOTE: The steps shown on these pages are illustrated with an Ultra²® Steadicam®. Your system may look slightly different, and all features may not be applicable.

Attaching the Camera

The basic idea: We want to position the camera's center of gravity about .75in (2cm) behind the centerline of the post fore-aft (as seen from the side) and directly over the centerline of the post side to side (as seen from the front or rear). We do this to facilitate both static and dynamic balancing. We fine-tune the placement of the camera as we balance the rig.

First, center the side to side and fore-aft adjustments of the camera mounting platform, using the knobs, the remote control, or better yet, flip the centering switch to "C" and the motorized stage centers itself!

Attach all the accessories to the camera, including lenses, loaded film magazines, focus motors, obie lights, transmitters, etc. Don't worry too much if you must add your motors or other accessories after you have attached the dovetail plate.

Using a rod or pencil, find the c.g. of the camera, both fore-aft and side to side. Temporarily mark this with pieces of tape.

Finding the camera's fore-aft center of gravity.

Finding the camera's side to side center of gravity.

Attach the long dovetail plate to the bottom of the camera, centered as closely as possible under the camera's c.g. Use two screws to keep the plate from rotating.

If possible, attach a second dovetail plate to the top of the camera, directly above the other dovetail. This may require additional hardware, such as a special low mode bracket for your camera.

Place the camera above the camera mounting platform. Be sure the locking lever is fully open. Angle the left edge of the dovetail into the holder. Be sure to keep everything parallel. Lower the right side into the holder.

Dovetail locking lever fully open.

If the camera won't drop fully into place, be sure the left side of the dovetail is fully inserted, all is parallel, and the locking lever is fully open. It's a close fit.

After the dovetail drops into place, close the locking lever half way and slide the camera until the fore-aft c.g. mark is about .75in (2cm) behind the centerline of the telescoping posts. Post #2 is approximately 1.580in (4cm)in diameter, so you can use the back of the post as a guide for placing the camera c.g.

Push the locking lever forward to fully lock the camera into place. You are now ready to static balance the sled.

Closing the locking lever.

Push firmly.

The dovetail locking lever has three positions: 60º back is fully open and the dovetail plate can be inserted or released. At the half way or 90 degree position, the dovetail can slide back and forth for gross positioning of the camera, but it cannot be released. All the way forward is the locked position.

Sliding the camera with the locking lever at 90 degrees. With the locking lever in this position, the dovetail can slide but cannot be removed.

Tip: If you add your focus motors at this point, remark the camera c.g. If the side-to-side position drastically changes, you may have to reposition the dovetail plate on the camera.

Big, important tip: Wrap up, tie up, tie down, Velcro®, or gaffer tape all cables so they don't flop around and mess up your precise balancing. If you have cables that run to the outside world, leave them off at this point.

For more information on general set up, balancing, and Steadicam® terminology, see Section One of ***The Steadicam® Operator's Handbook.***

Camera c.g. .75in (19mm) behind the center post – fore-aft.

Camera c.g. centered over post – side to side.

Static Balancing

Static Balancing

First, extend the posts and position the monitor where you want it, then find the proper position for the battery and camera for static and dynamic balance.

Static Balancing

The sled should be carefully balanced to help the operator get the shot. Before balancing, the sled should have the camera and battery attached, all cables secured, and all accessories on board. The gimbal should be near the top of its post.

First we must position the monitor to the best possible advantage. We want to be able to see the image and we want it to create the proper balance and inertia for the shot. Experience will help, but here are some general rules:

Extend the monitor horizontally to increase pan inertia.

Bring the monitor closer to the post for a quicker, “hand-held” feel.

Lower the monitor and/or extend the posts to balance a heavy camera, gain lens height, and/or to increase tilt and roll inertia (or all three!!).

The posts and the monitor bracket should all be properly aligned. Check the index marks on the posts. Release the proper clamp and rotate any section that is out of alignment.

For normal operating

Mount the gimbal on the balancing stud. Even if your C-stand has plenty of sand bags, it’s a good idea to have an assistant hold the C-stand. You need to balance the sled in all three axes: fore-aft, side to side, and top to bottom. Pick the most out of balance axis and get that close to being in balance, then work on another axis. You may have to go back to tweak the balance in any given axis several times.

With the camera and monitor set, release the two battery rod clamps and pull out the battery until the sled balances upright. Balance as best you can with the battery – do not move the camera or monitor – then tighten the battery rod clamps.

To adjust top-to-bottom balance, tilt the sled until it is horizontal. Hold the sled firmly and release the gimbal clamp. Slide the gimbal until the sled balances horizontally - but never allow the sled to move from horizontal with the gimbal clamp open. Slide the gimbal up towards the camera about .5in (13mm) and lock the gimbal.

Now let the sled rotate (drop) through vertical and note the time. A two second drop time is a good starting point. 2 to 4 seconds is typical. Raise or lower the gimbal slightly to get a faster or slower drop time. (Again, only release the gimbal clamp when the rig is horizontal!!) A different drop time is required for long mode shooting.

To fine tune fore-aft and side to side balance, use the knobs on the camera mounting stage, or use the remote control.

When the sled is very bottom heavy, it has a quick drop time and it will require bigger movements of a weight (camera or battery) to properly balance the sled. When the sled is nearly neutrally balanced top to bottom, very slight movements of any component will have a large effect on balance.

Tip: When adjusting the balance fore-aft or side to side, moving any weight “up hill” makes the sled hang more vertically.

Working with an Ultra$^{2®}$ and a Very Light Camera

With a fully compressed sled and a very light camera, the gimbal can get very low, causing the arm to hit the electronics module.

Tip one: You can raise the gimbal by raising the monitor while leaving the sled length the same. Release the clamps at the top of posts three and four and slide post three up to the gimbal. Lock post three in place, and then lock post four to maintain the minimal sled length. Move the upper monitor mount to the top of post 3, and attach the monitor.

Re-balance top-to bottom.

An alternative solution (tip two): Raise the c.g. of the sled – and therefore the gimbal – by raising post number one. This makes the whole sled a little longer and raises the lens height slightly. Either way, the gimbal moves away from the electronics module.

Tip three: Add weight to the top of the camera.

Tip: To speed up the balancing process, hold the sled vertical with your operating hand on the gimbal. Hold the gimbal the same way you would do while operating. Hold the sled absolutely vertical as you adjust the side to side or fore-aft balance. Turn the adjustment knobs with your other hand (or use the remote) until you feel no pressure on your operating hand, and the sled will be in static balance.

Dynamic Balancing

A sled is in dynamic balance when the center post remains vertical as the sled is panned (and this is critical) at any and all panning speeds..

Dynamic balance is extremely important for precise operating and also for whip pans.

For each arrangement of camera, monitor position, post length, accessories, etc., there are many possibilities for statically balancing the rig.

However, for each arrangement of camera, monitor position, post length, accessories, etc., there is only one combination that also balances the sled dynamically.

There is some leeway as to the required precision of dynamic balance. What is acceptable depends upon the operator and the situation.

Dynamic balance can easily and quickly be achieved by the trial and error method. You can also use the Dynamic Balance Spreadsheet which is available at www.steadicam.com.

In all cases, when a sled is in dynamic balance, both the camera's c.g. and the battery' c.g. will be to the rear of the center line of the center post. This rule gives you some point to begin balancing the sled.

First, set up your sled at the proper length for the shot and place the monitor where you want it for proper viewing and inertial control. Position the camera so that its c.g. is about .75in (19mm) behind the center post. The center post is approximately 1.580in (4cm) in diameter, so you can use the back of the post as a guide.

Three figures to study for understanding dynamic balance

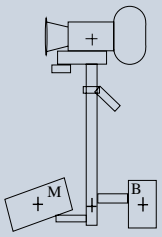

The top figure looks like the Model One or the SK. The camera c.g. is centered over the post; the monitor and battery are on the same horizontal plane, and their common c.g. is in the post. This unit is in dynamic balance and pans flat.

The second figure has the monitor raised a bit. This looks like most Steadicam® models, high or low mode. Note that the battery c.g. is closer to the post, and the camera c.g. has moved to the rear. Why?? See the third figure.

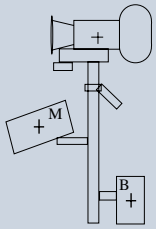

In the third figure, the monitor has been raised all the way up in front of the camera. It's absurd, of course, but it makes a point. Now the common monitor and camera c.g. is over the post, and the battery's c.g. is directly under the post.

So you can see that as the monitor is raised, the camera c.g. must move to the rear and the battery c.g. must move towards the post. With the Ultra²®, the monitor is always raised above the battery. Therefore camera is always to the rear of the centerpost.

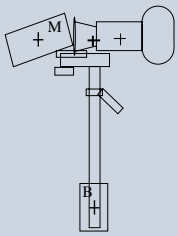

It typically works out that the camera c.g. is pretty close to .75in (19mm) to the rear — a bit more if the camera is light or the monitor is higher, and somewhat less if the camera is very heavy or the monitor is lower.

Next, static balance with the battery so the sled hangs perfectly vertical fore-aft. Use a slow drop time (3-4 seconds).

Trim side to side with the camera, using the knobs on the stage. If your rig is equipped with the stage motor remote control, you can use it as shown. Fine tune fore-aft balance with the motors as well. Double check that the post is perfectly vertical. Give the sled several careful test spins. Very important: do not spin the rig very fast – certainly not any faster than your usual panning speed.

Note the results. Good or bad, flat pan or wobbly? Is it your technique or is the sled out of dynamic balance?

To get the sled into dynamic balance, do not move the monitor! You put it where it is for a reason, so leave it there. Move the battery a little bit first, then rebalance with the camera.

There are only two directions to move the battery, in or out. You have a 50% chance of choosing the right direction, so stop worrying about it and give one direction a test. Just be sure to make a note of which direction you move the battery.

After you lock the battery in place, you must rebalance the sled statically with the camera. Do not move the monitor!

Once you are in static balance, spin the sled again. Is it better or worse? Again, you have two choices for moving the battery. Re-rack, rebalance, and spin again (and again!) until the sled pans flat. This should not take a lot of time.

When the battery is within about .25in (6mm) of ideal, the sled will behave nicely and feel “sweet.”

We suggest you do not attempt to do this for the first time on set!

Adding any accessory to the sled will affect both static and dynamic balance.

Changing the length of the sled, moving the monitor in or out, up or down will change both static and dynamic balance.

How much will dynamic balance change? It depends on the mass and position of the new object, and the masses and positions of everything else on the sled.

You will discover that as the monitor is placed higher towards the camera, the closer the battery c.g. gets to the center post, and the more the camera c.g. moves away from the post to the rear.

In practice, it’s a lot easier than it sounds on the page, and luckily, there’s one great gift in all this: it doesn’t matter for dynamic balance what weight camera you are using or if you change lenses, filters, tilt the head, etc. Really!

So if you make any changes with the camera, there are no worries about getting back in dynamic balance! You only need to rebalance statically and you will be in dynamic balance again. Honest.

Put the other way around: you can set up your rig in various ways (long short, monitor high or low, extended, etc.) with a practice camera at home, make note of the positions of the monitor and batteries, and be able to get into dynamic balance quickly on set, regardless of the camera or accessories you might carry. Really. Honest. No fooling.

For the complete story, see the Dynamic Balance Primer and play with the Dynamic Balance Spreadsheet, available online at www.steadicam.com.

Three tips:

- The monitor pivots close to its center of gravity, so changing the angle of the monitor will not affect dynamic balance.
- The tilting head nearly preserves the camera’s center of gravity, so tilting the camera also has very little effect on dynamic balance.
- Changing lenses or adding accessories to the camera (or even changing cameras) will not mess up your dynamic balance. Just re-balance statically (rack the camera) and you will be back in dynamic balance.

Make sure to give it an even spin. Use your thumb and first finger up at the gimbal.

Spinning a bit wobbly.

Looking good!

Inertial Control

Inertial control

Always remember to make the sled's balance and inertia work for you, not against you.

All Steadicam® stabilizers work, in part, because various masses are added to and mounted away from the camera, which slows down the camera's angular response to external forces.

Our primary tool for inertial control is extending or compressing the centerpost and/or the battery, monitor, and other components. The "moment of inertia" generated by each component is a function of its mass (weight) times the square of its distance to the center of rotation (the gimbal). Doubling the distance creates four times the inertia.

Positioning masses away from the gimbal will increase inertia, while bringing them closer to the gimbal (the point of rotation) will reduce inertia.

In general, the "bigger" the sled is, the slower its rotation and the more stable it will feel.

Extending the center post will slow down the rig's angular response in tilt and roll, while extending the battery and/or monitor will slow down the rig's response in tilt and pan.

Reducing the length of the post or bringing in the battery and monitor will make the rig rotate more quickly on those same axes.

To get one effect or benefit you may have to sacrifice performance in some other area. For instance, changing the post length also will have some effect on the lens height (although a lot less than the post extension), and the position of the

Shadow™ sled at maximum horizontal extension.

Ultra²® sled at maximum horizontal extension.

gimbal relative to the camera mounting stage or the electronics module.

Experiment to become familiar with all that happens as you move components around. Although the sled is stabilized in all three axes, the sled is most stable or inert in the tilt axis. This is the consequence of an important, early design consideration, which was to get the sled close to the body and make panning and switches as easy as possible.

Some actual numbers

The monitor and yoke weighs approximately 4.8 lbs. The two batteries, the mount and the converter weigh 4.6 lbs.

In the maximum configuration, the monitor's c.g. is extended 17in (43cm), the battery pack's c.g. is extended 16in (41cm), creating a total of about 2,564 pound inch^2 in the pan axis.

In the minimum configuration, as shown, the monitor is extended 5in (13cm) and battery 5.5in (14cm), creating only 259 pound inch^2 — almost 10 times less angular resistance in the pan axis. We love the square law!!

If you remove one battery for a 12 volt rig, flip the battery down, and push the battery pack all the way in, you can reduce the pan inertia even further - to 139 pound inch^2!

If you want a quick, fast panning and tilting rig, bring the masses in as close as possible to the gimbal. If you want a slow rig, or need the shot to be as stable as possible, spread the masses far apart. Every time you move one component, other things happen with static and dynamic balance and with viewing and clearances and stability.

Minimal pan inertia with the Shadow™ sled.

Ultra$^{2®}$ sled at minimum horizontal extension.

Minimum pan inertia with one battery.

Lens height and the telescoping post

Just how high or low a lens height can you get?

As a rough estimate, in high mode you should be able to get a lens height of about 7.5 feet (2.3m) with an Ultra$^{2®}$ stabilizer. If you are tall or using a light camera, a lens height of 8.5 to 9.5ft (2.6-2.9m) is not impossible. For 2 post systems like the Shadow™ stabilizer, normal lens height will be in the 6 to 6.5ft (1.9-2m) range, and about 7.5ft (2.3m) with very light cameras.




Maximum lens height

To get the maximum possible lens height with any camera:

- Extend the bottom two sections (posts #3 and #4)
- Fully lower the monitor all the way down on its section (post #4).
- Position the gimbal at the top of its section (post #2).
- Raise the camera from the gimbal by extending the upper section (post #1) until the rig is in static balance. The lighter the camera, the more you can extend it from the gimbal and raise the lens. An assistant is useful for this operation, or grab the battery with your legs as shown.
- If you have a two or three post system, extend all posts fully and then balance top to bottom by moving the gimbal.

To gain additional gimbal and lens height, use one of the provided long arm posts in the arm and also position the socket block as high as you can on your vest.

If you can carry additional weight, add it to the bottom of the sled via the integral dovetail. Then raise and rebalance the camera.

This arrangement of components creates the maximum distance between the counterweights (battery, electronics, and monitor) and the gimbal (the pivot or balance point), which enables you to push the camera c.g. as far as possible from the gimbal.

But how high can one get the lens?

Alas, the answer isn't easy. The exact lens height you can achieve with any sled depends on your height, the camera weight, and how much additional weight you are willing to carry at the bottom of the sled.

A useful accessory: specially made stainless steel rods that fit perfectly inside the battery rods. The two rods weigh .75lbs (.34kg) and screw tightly into place. The low position help keep the sled shorter (or the gimbal lower) and the battery in slightly as well.

Lens Height – Camera Weight and the Facts of Life

Using a heavy camera makes it hard to gain a lot of additional lens height via the telescoping posts. Using a Genesis®, BL IV or similar very heavy camera will be frustrating. And it's heavy!

If you want to get a really high or low lens height, you must use a lighter camera.

The maximum theoretical lens height that one can achieve with the Ultra$^{2®}$ is about 48in (1.2m) up from the gimbal. You first set the gimbal at the bottom of post 2 with the rig fully expanded. Place the monitor as low as it can go and flip the battery downwards. This gimbal placement generates a lens height of about ten feet 5in (3.2m), but it requires a very, very light camera, and/or a very heavy counterweight, and/or a clever use of Antlers™ as an additional counterweight as shown in the photo (with an original Ultra).

Establishing the primary gimbal height range with the shortest post in the arm.

Note that the operator can reach higher with his operating hand, but the arm can't reach any higher. Do this with the arm attached to the socket block at its lowest practical point on the vest, and with the shortest possible arm post. This will generate your primary range of gimbal heights. You may find it useful to have someone measure this range of lens heights.

Lens Height — High Mode

Normal range for high mode with short arm post. Range is different if operator is taller or shorter.

The range of the G-70x™ arm is 29in (74cm). If, while wearing the rig, you stretch up a bit while booming up and scrunch a little while booming down, the boom range is about 34in (86cm).

You can change your lens heights in many ways

The basic tools are: raising the socket block, using longer arm posts, using an F-bracket, making the sled shorter or longer, flipping to low mode, and any combination of these techniques. Each technique has its advantages and disadvantages; it's up to you to decide which technique works best for the shot.

One easy way to shift the arm's boom range is to raise the socket block on the vest. It's not a big change (3.5in/9cm), but it might be just enough and there's no real operating penalty or compromise.

Another easy way to raise lens heights is to use a different length post in the arm. The longest post you should use is 12in (30cm). A longer post will put huge stresses on the arm, and you can't reach higher and operate at the gimbal anyway.

You can also extend the telescoping post and balance the rig with the camera further from the gimbal. How much of an increase in lens height you get depends on how heavy the camera is, and how much weight you are willing to add to the bottom of the sled. This mode is often called “super-high mode” or “long high mode.” It depends on the level of hype you want to use.

Heavy cameras in long mode (high or low) will be disappointing. There is very little additional lens height for a huge increase in sled length. Light cameras are operator friendly in many, many ways.

Sleds longer than 6 feet (1.8m) are impractical to carry, don’t fit through doorways, limit boom ranges, and are hard to control.

Low high mode

We can use the F-bracket in high mode to lower the range of lens heights. It’s sometimes called “low high mode.” How low we go is often a function of how low we can reach.

Lens Height — Low Mode

Low mode and long low mode radically change the range of lens heights we achieve.

We typically use the F-bracket to bring the arm back into a proper relationship with the sled so we can pan, tilt, and make switches without hitting the camera. A longer post from the F-bracket to the gimbal is impractical. Even with the shortest possible post, one cannot reach the gimbal at the bottom of the G-70™ arm’s range. A longer post only lowers the maximum height you can reach.

In low mode, we typically raise the socket block and add longer posts to raise the range of heights and restore the full boom range of the arm. If we don’t use these techniques while in low mode, we cannot reach the gimbal at the bottom end of the arm’s range, and therefore we are wasting precious boom range.

A long post in “normal length” low mode may make the arm interfere with the sled again, so you must test how long a post you can use.

Very long low mode configurations don’t require an F-bracket for clearance. Not using an F-bracket is just another easy way of raising the range of lens heights.

Configuring the sled for low mode

In order to configure the sled for low mode operating, you must:

- Flip the monitor and the camera upside-down.
- Attach the optional slanted F-bracket (P/N 252-7906) to the gimbal.
- Rebalance the sled, both statically and dynamically.
- Re-set the electronic level.
- You also might change the post in the arm and/or raise the socket block on the vest to restore some of the arm's lost boom range.

The camera will need some means of attaching a second dovetail (P/N 252-7410) to the top of the camera.

A low mode handle clamp (P/N 078-7393-02) works for some cameras, but be sure the camera's handle is strong enough. Many plastic handles on video cameras are inadequate, and a custom cage or bracket is required.

Many film cameras come with dedicated low mode brackets and 100% video viewfinders. Some camera-specific low mode bracketry might also provide a means of mounting motor rods (or a dovetail with motor rods), and this system should not interfere with camera functions or working with the camera in high mode.

Most operators work with the low mode bracketry and second dovetail in place — ready to go at all times.

Attach the second dovetail directly above the first dovetail. Check that it does not interfere with changing mags or any other camera functions.

Remove the monitor mount and flip to low mode

Always support the monitor. Loosen the Kipp handle, depress the safety button, and slide the monitor bracket straight up or down. To replace, engage the monitor bracket with the dovetail squarely and slide it down until the safety clicks in. Tighten the Kipp handle. The monitor will be square to the post.
By design, the monitor flips on its c.g., preserving dynamic balance — if the sled's length isn't changed.

Balance the sled

The sled can be balanced the same as in high mode. Hang the rig by its gimbal on the balancing spud. The camera will still be on top, but it is upside down. Balance statically and dynamically. Once balanced, adjust your drop time so the camera now falls to the bottom of the rig: simply move the gimbal toward the ***electronics*** to achieve a proper drop time.

Cautionary Tip: When in low mode and grossly adjusting the camera position by sliding the dovetail, be sure to: 1) support the camera; and 2) lock the dovetail by pushing the lever forward. Balance as you would for high mode.

Adjust the electronic level

Place a spirit level on the camera. Hold the sled level and push the level button quickly. Pushing the "level" button on the sled for less than 1 second will set the level; pushing and holding the level button for 1-3 seconds will alter the direction for low mode.

The slanted F-bracket (aka CRB)

There are two positions for the F-bracket (P/N 252-7906), one for regular side operating and one for goofy-foot. Be sure to angle the F-bracket away from you (about 45 degrees forward) when standing in the Missionary position.

Regular operating

Goofy foot operating

The F-bracket brings the arm back into a proper relationship with the inverted sled. Without an F-bracket, the end of the arm will be next to the camera. Switches are impossible and operating is severely limited.

With the F-bracket

Without the F-bracket

Tip: In very long and low mode operating, the F-bracket can be omitted, as there is plenty of room for the arm.

The slanted F-bracket has several advantages over the original straight F-brackets. With the new bracket, the gimbal-to-centerpost angle is changed, increasing the gimbal yoke's clearance to the centerpost. The operating hand-to-arm hand differential is reduced, which makes it easier to operate and is less fatiguing. The new bracket also wastes about three fewer inches of the arm's boom range than the old style F-bracket.

A useful trick

The range of low mode lens heights can be lowered by making the rig more bottom heavy. With this trick – and the unique design of the Ultra$^{2®}$'s telescoping post – even a very heavy camera can kiss the ground. In fact, if one didn't care at all about bottom heaviness, the top of the camera could be almost 4 feet (1.2m) below the gimbal – which might be great for a trench or grave shot or working off scaffolding.

Low mode operating

Traditionally, it's considered harder to operate in low mode than in high mode. Why?

Several factors may work together to make low mode operating harder. The operator usually holds the sled further from his body than in high mode. The operator's hands are not at the same height. Many times, the post is tilted from vertical. The boom range is sometimes reduced. The rig may not be in dynamic balance. The operator often cranes his neck to see the image. In addition, every director wants the lens height lower or higher than one can properly reach. And it's just plain weird to have the monitor so far above the lens.

To make low mode operating easier and more precise:

Use the tilt head to keep the post more vertical and to make viewing the image easier. Use the F- bracket to reduce the hand height differential and to have fewer clearance issues with the post. Use the telescoping post system and different arm posts to set the proper lens height range and to restore the full boom range of the arm.

Be sure to rebalance dynamically as well as statically. Dynamic balancing is often ignored because it's next to impossible to spin balance in low mode, but dynamic balance is critical for precise work.

If the operator does not change the length of the sled or the monitor position, the sled remains in dynamic balance. (Remember, the monitor tilts and flips on its center of gravity.)

But one still has to hold the camera further from one's body, and the monitor is still above the lens. So practice until low mode is as easy as.... it can be.

Long Mode Operating

Long mode operating presents some wonderful opportunities and hazards. Unusual lens heights, both high and low, is the principal allure of long mode operating.

Tiffen's tool-free clamps make it easy to extend or compress the integral post system, and also to configure the monitor and battery to best advantage for the shot. The tilt head makes long mode operating practical.

Most operators are used to working with relatively short sleds. As the telescoping posts are extended, new factors must be taken into consideration. Viewing, clearances, increased inertia, inertial imbalances, static and dynamic balance, and flexing are key issues.

Increasing the lens height by extending the telescoping post may be the only way to get the lens height you need. It may also get you better viewing of the monitor or a needed increase in tilt and roll inertia – or all three!

The standard "drop time test" that is typically used to determine bottom heaviness should be ignored.

Instead of using a drop test, tilt the sled with your operating hand and note how much force is required. Compare this force to your normal length sled's feel. Accelerate the rig and note the pendular action. Again, adjust the bottom heaviness accordingly, depending on the requirements of the shot.

The operator dynamically balances a long sled using the same procedures as with a shorter sled. The trial and error method is fairly quick. However, because there are so many possible configurations with the Ultra$^{2®}$, or similar Steadicam® rigs, spin balancing for each one can be time consuming and unproductive. Use the Ultra$^{2®}$ Dynamic Balance Spreadsheet to virtually discover how to get your rig into dynamic balance under various conditions.

Very long sleds have a lot of inertia in tilt and roll. It takes time and effort to tilt or roll — and time and effort to stop a movement you've started. Although the sled may be harder to get off-level, it's also harder to get it back to level once you've strayed.

With the monitor fully in — which might be desirable for quick panning — the pan axis will feel very light compared to the tilt or roll axis. To make the sled feel more "normal" (or inertially balanced in all three axes), extend the monitor fully and extend the battery for dynamic balance. Extending the monitor and battery adds a lot of inertia in the pan axis.

A long post configuration adds lots of inches to the bottom of the sled. Operators tend to pay attention to the lens, and they may be surprised when that other part of the sled strikes something on the set. Panning the camera when a long sled is angled up or down requires that both ends of the sled move in great arcs. This spatial translation of masses is very hard to control.

The uselfulness of any long mode sled is greatly enhanced by the addition of an integral tilt head and a motorized stage, if so equipped. Use the tilt head to keep the rig more vertical, reducing the spatial translations, and, at the same time, reducing clearance problems between the sled and objects on the set.

Use the tilt head to keep the sled in dynamic balance — always a plus.

With an Ultra$^{2®}$ sled in the most expanded high mode, the bottom of the sled can be as much as 46in (117cm) below the gimbal.

The operator also needs to get used to the increased distance from the monitor to the lens.

Tip: Avoid violent moves with long sleds. The stresses can be very large.

Attempting a long low mode pan with the lens looking up:

With a tilt head

Without a tilt head

Without a tilt head and the lens angled up or down, precise panning becomes nearly impossible, due to the huge and odd spatial translations of the sled. The faster the pan, the worse it gets.The camera is tilted 20 degrees up in both cases.

The Stiffening System

Any long post sled, whether single or multi-section, suffers from increased flexing. The longer a post, the more it flexes — unfortunately by the cube law. Doubling the post length makes the rig eight times more flexible!

The carbon fiber telescoping post is very stiff, but it will need extra rigidity under certain situations. The heavier the camera or the more violent the moves, the more help is required.

The stiffening system consists of attachment points on the monitor, the battery mount, the bottom of the sled, and just underneath the tilt head; and a length of lightweight Vectran® line.

Vectran® is a polymer cable that is as strong as steel, but it has one-fifth the weight and is much more flexible.

The Vectran® line is laced from one side of the battery mount down around a pin at the base of the sled, up around the spreader on the monitor, further up to a hook just under the tilting head, and down the other side, around the pin at the bottom of the sled, and back up to the battery where the line is tensioned and secured under a special washer.

The Vectran® line is given its final tension by extending the telescoping posts slightly, pulling out the monitor rods as shown, and/or by tilting the sled horizontal with the monitor down and retightening the line.

The stiffening system is very useful with normal length sleds when the shot has violent moves or high stresses, such as during a vehicle shot on rough roads.

The Tiffen Company, 90 Oser Avenue, Hauppauge, NY 11788
631-273-2500 • 1-800-645-2522 • www.tiffen.com
Tiffen Steadicam Operations, 2815 Winona Avenue, Burbank, CA 91504
Phone: 818-843-4600 • 818-843-8321

257010 Electronics

p/n LIT-257010-F

STEADICAM®

Base Connectors

Shadow™ stabilizer base connectors

- Top Left: HDSDI, direct connection to HDSDI connector in stage; no connection to the video distribution amplifier. If your electronics fail, you can use this connector to send a composite video signal to the monitor. BNC.
- Top Center: Video out and +14 VDC. 4 pin HRS.
- Top Right: Monitor connector: 12 and 24 volt power, composite video, and data transmit and receive lines. 8 pin Lemo.
- Bottom Left: RGB, HD component video
- Bottom Center: RCA video in/out for a video recorder. A small slide switch on the back sets in or out.
- Bottom Right: Auxiliary 28 and 14 volt, 3 pin Lemo, good for powering gyros or other accessories.

A word about 12 and 24 volts as used in the manual: 12 and 24 volts typically refer to the nominal voltages required by cameras and accessories, but the voltage range accepted by the device might be 10 to 16 volts or 20 to 34 volts. Each camera or accessory has its own range of useful voltages.

Different battery chemistries and numbers of cells typically result in nominal battery voltages of 14.4 or 14.8 volts, or with two batteries in series, 28.8 or 29.6 volts. The actual voltage in a battery might be from 11 to 17 volts, depending on charge and battery type. Nominal battery voltages are always higher than the nominal required by the device, so that when the battery is almost depleted, it still has more voltage than that required by the device.

Some “12 volt” connectors on the sled may have a regulated (fixed) output of 12 to 14.4 volts, regardless of the voltage of the batteries at any given moment.

Note: If you are not using the HDSDI and/or the HD component lines, you may use them for other purposes, such as a microphone line down the post or speaker wires up the post.

Shadow™ Video Matrix

On top of the base is a multi-position switch that determines what standard definition video signal appears on the monitor and at the three video output connectors. It has no effect on High-definition signals.

There are two possible sources for the video signal: the camera (via the BNC on the stage), and a signal fed into the RCA jack on the front panel of the sled base. The latter is only available if the “In-Out” switch is set to “In.”

There are four video outputs: the monitor, the two Hirose connectors, and the RCA jack when set to “Out.”

You can add framelines to the camera’s video signal to each output.

It is not possible to add framelines to a video signal coming into the RCA jack.

The RCA jack, when set to “In,” sends video only to the monitor. The two Hirose connectors always are fed a signal from the camera.

The default setting (#8) adds framelines to camera’s video signal going to the monitor, but not to the RCA connector, nor to the two Hirose connectors.

Settings 0 though 7: Framelines are not added to the camera’s video signal that is sent to the monitor. You have various choices and combinations of adding framelines or not to the other outputs.

Settings 8 though F: Framelines are added to the camera’s video signal that is sent to the monitor. You have various choices and combinations of adding framelines or not to the other outputs.

Example: You want framelines added to the monitor and to the RCA output (i.e., to a recorder), but not to either Hirose connector. Use setting #9.

Connector	**0**
**** Mon (Front Panel)***	
Camera Video Input	X
Camera Video Input with FLG Overlay	
RCA Video Input	
† Mon (Front Panel)	
Camera Video Input	
Camera Video Input with FLG Overlay	
RCA Video Input	X
**** RCA (Front Panel)***	
Camera Video Input	X
Camera Video Input with FLG Overlay	
Hirose (Front panel)	
Camera Video Input	X
Camera Video Input with FLG Overlay	
Hirose (Stage)	
Camera Video Input	X
Camera Video Input with FLG Overlay	

NOTE:
**** = RCA switch set to "OUT" position.***
† = RCA switch set to "IN" position.
Position #8 is the default position.

The 12 and 24 volt low battery warning levels are set at the factory. If you want to alter the settings, there are two pots, marked 12T and 24T for this purpose.

To adjust each pot: Set the sled for 12 or for 24 volt operation. Hook the sled up to a variable power supply, dial in the voltage that you want as the warning point, and adjust the pot until “low battery” is indicated: LED’s flash next to the on-off switch and the on-screen indicator blinks.

An alternative method: power the sled from a battery. Wait until the low voltage indicator on the battery starts to show low, then adjust the pot until the sled shows a low voltage. Or you can calibrate using the battery voltage indicator on some cameras.

Selector Switch Position Clipper 312/324 (257-0003 PCB) 02-25-08

1	2	3	4	5	6	7	8	9	A	B	C	D	E	F
x	x	x	x	x	x	x								
							x	x	x	x	x	x	x	x
x	x	x	x	x	x	x	x	x	x	x	x	x	x	x
	x		x		x		x		x		x		x	
x		x		x		x		x		x		x		x
x	x	x					x	x	x	x				
			x	x	x	x					x	x	x	x
x			x	x			x	x			x	x		
	x	x			x	x			x	x			x	x

How to set up your frameline generator

The four buttons on the frameline generator control the framelines, crosshairs, on-screen horizon position, and battery indicator position, as well as the frameline style, crosshair style, graphic brightness, graphic elements on or off, and two stored frameline and graphic presets.

	Frameline Mode Descriptions	MODE ENTRY REQUIREMENTS				KEY FUNCTIONS WHILE IN MODE			
#	MODE	UP	DOWN	LEFT	RIGHT	UP	DOWN	LEFT	RIGHT
1	Recall Frameline Position #1	>2 sec.							
2	Store Frameline Position #1	>4 sec.							
3	Recall Frameline Position #2				>2 sec.				
4	Store Frameline Position #2				>4 sec.				
5	FLG On/Off			>1 sec.					
6	Graphics On/Off		>1 sec.						
7	Cross Hair position			>1 sec.	>1 sec.	Move UP	Move DOWN	Move LEFT	Move RIGHT
8	Horizon position			>2 sec.	>2 sec.	Move UP	Move DOWN	Move LEFT	Move RIGHT
9	Battery position			>3 sec.	>3 sec.	Move UP	Move DOWN	Move LEFT	Move RIGHT
10	Graphics Brightness	>1 sec.		>1 sec.				DECREASE all	INCREASE all
12	Lower & Left Frameline position		>1 sec.	>1 sec.		Move UP	Move DOWN	Move LEFT	Move RIGHT
13	Upper & Right Frameline position	>1 sec.			>1 sec.	Move UP	Move DOWN	Move LEFT	Move RIGHT
14	Frameline style select		>1 sec.		>1 sec.	Style #1	Style #2	Style #3	Style #4
15	Cross Hair style select		>2 sec.		>2 sec.	Style #1	Style #2	Style #3	Style #4
16	EXIT	X	X						
17	Factory Reset	X	X						

The charts tell you how it all works — here's one example. Suppose you want to move the position of the horizon display. You enter the horizon position mode by simultaneously pushing down the left and right buttons for about two seconds. The horizon graphic will pulse on and off. You move the graphic UP, DOWN, LEFT, or RIGHT by pushing the appropriate button.

If no buttons are pressed for several seconds, the FLG will exit the horizon position mode. You could also press the up and down buttons simultaneously to exit the programming mode.

You can store the current settings for the framelines, crosshair, horizon, and battery by holding down the UP button for about four seconds. "SET #1" will be displayed on the screen for one second.

If you change something and want to return to these settings, just push the UP button for about 2 seconds — "PRESET #1" will be displayed on screen for one second. Note the little "1" symbol by the upper button.

The second preset is controlled by the RIGHT button — it's also marked "2."

	Frameline Mode Descriptions	IN-MODE INDICATION DISPLAYED ON SCREEN	MODE EXIT REQUIREMENTS	COMMENTS
#	MODE	"*" displayed in top center of screen while in any mode		
1	Recall Frameline Position #1	"RCL 1" confirmation displayed on screen for 1 sec.	n/a	All position #1 settings recalled and displayed for Frameline, Cross Hair, Horizon, and Battery
2	Store Frameline Position #1	"SET #1" confirmation displayed on screen for 1 sec.	n/a	All position #1 settings stored for Frameline, Cross Hair, Horizon, and Battery
3	Recall Frameline Position #2	"RCL 2" confirmation displayed on screen for 1 sec.	n/a	All position #2 settings recalled and displayed for Frameline, Cross Hair, Horizon, and Battery
4	Store Frameline Position #2	"SET #2" confirmation displayed on screen for 1 sec.	n/a	All position #2 settings stored for Frameline, Cross Hair, Horizon, and Battery
5	FLG On/Off	Frameline display is toggled on and off	n/a	Frameline OSD is toggled on and off.
6	Graphics On/Off	Horizon, Cross Hair, and Battery OSD's are toggled on and off.	n/a	Horizon, Cross Hair, and Battery OSD's are toggled on and off.
7	Cross Hair position	Cross Hair graphic pulses on and off	Timed-out if no buttons pressed or activate EXIT mode	Cross Hair graphic can be moved anywhere on screen.
8	Horizon position	Horizon graphic pulses on and off	Timed-out if no buttons pressed or activate EXIT mode	Horizon graphic can be moved anywhere on screen.
9	Battery position	Battery graphic pulses on and off	Timed-out if no buttons pressed or activate EXIT mode	Battery graphic can be moved anywhere on screen.
10	Graphics Brightness	Entire frameline graphics pulses on and off	Timed-out if no buttons pressed or activate EXIT mode	Brightness adjustment of OSD graphics.
12	Lower & Left Frameline position	Lower and Left frameline graphic line pulses on and off	Timed-out if no buttons pressed or activate EXIT mode	Framelines can be moved anywhere on screen.
13	Upper & Right Frameline position	Upper and Right frameline graphic line pulses on and off	Timed-out if no buttons pressed or activate EXIT mode	Framelines can be moved anywhere on screen.
14	Frameline style select	A selection of frameline styles will be shown on the screen.	Frameline style changes to selected pattern after button press.	Selection between 1 of 4 pre-determined Frameline line graphics.
15	Cross Hair style select	A selection of cross hair styles will be shown on the screen.	Cross Hair style changes to selected pattern after button press.	Selection between 1 of 4 pre-determined Cross Hair graphics.
16	EXIT	n/a	n/a	Exit all modes and returns to main display.
17	Factory Reset	n/a	n/a	With both buttons pressed at power up, system is reset to factory default settings.

Note: Pure white graphics won't dim (mode 10). Choose a gray graphic or frameline if you want to dim it.

The Artificial Horizon

Adjustments, and displays

The artificial horizon has three controls – a button and two rotary switches. The button on the back of the electronics base controls the zero offset, direction, type of display, and horizon on/off. The switches are accessible via holes on the port side of the base. One switch controls the "range" of the display and the other the "rate."

The button on the back

Pushing the button (LVL) for less than 1 second will reset the sled level (sets the "zero offset").

Place a small bubble level on a surface parallel to the bottom frame of your camera (usually the dovetail plate works well). Angle and hold the sled until this bubble reads level, then push and release the horizon button quickly. The display should now read "level."

Pressing the button for more than one second but less than three will flip the display direction – useful for going to low mode and back. If an UltraBrite™ monitor is being used, the center two LED's on display will flash to confirm that a mode change has occurred. Be sure to re-set the zero offset when going to low mode and back.

Pressing the button for three to five seconds will switch the LED display from bar graph mode to "night rider" dot mode. Again, the center two LED's on the display will flash to indicate that a mode change has occurred.

Pressing the button for five to thirty seconds turns horizon system off or on. All LED's will be off.

Pressing the button for more than 30 seconds resets everything to default values.

On-screen level display — only available with composite video signals.

Level, UltraBrite²™ Monitor

Off-level, "Night-Rider" mode

Off-level, "Normal" mode

Phantom™ base

Choosing a Range

The range switch sets the sensitivity of the display. The smaller the range, the more sensitive the display will be. The default setting is “0” or +/– 5 degrees. We suggest you experiment with settings 1 through 6. The range choices beyond 5 degrees might be useful if one wanted to hold a specific Dutch angle. Setting “F (15)” is the full range of the sensor.

Range Choices

Setting	+/- Degrees
0 (default)	5
1	2
2	2.5
3	3
4	3.5
5	4
6	4.5
7	5
8	5.5
9	6
A (10)	6.5
B (11)	7
C (12)	8
D (13)	9
E (14)	10
F (15)	180

The range switch interacts with the rate switch. Typically, the smaller the range, the less integration you will need. Ranges or rates significantly larger than the default values are not typically used.

Setting a Rate

The rate switch sets the integration (or averaging) time. The longer the integration time (the lower the frequency or Hz), the slower the system responds. A longer integration time avoids the big, erroneous signals as you accelerate or decelerate. The faster the integration time, the more the indicator will jump around. Experiment and pick the “rate” you like.

There are sixteen positions, from zero to nine, and A through F. The default setting is “0” which equals 5Hz, a good compromise. Position one (.75Hz) has the most integration and slowest response. Position F has the least integration and fastest response.

Rate Choices

Low Pass filter settings (6-Pole IIR filter)

Setting	Hz
0 (default)	5
1	0.75
2	1
3	2
4	3
5	4
6	5
7	6
8	7
9	8
A (10)	10
B (11)	12
C (12)	13
D (13)	16
E (14)	18
F (15)	40

The Tiffen Company, 90 Oser Avenue, Hauppauge, NY 11788
631-273-2500 • 1-800-645-2522 • www.tiffen.com
Tiffen Steadicam Operations, 2815 Winona Avenue, Burbank, CA 91504
Phone: 818-843-4600 • 818-843-8321

Helping Create the World's Greatest Images™

Batteries: Ultra²®/Shadow™

p/n LIT-257010-G

STEADICAM®

Batteries

PowerCube™ batteries and rotating mount

The PowerCube™ batteries are 6.0 Ah, 14.8V. Please read the literature that comes with each battery and charger for details.

Generally we use the battery in pairs, generating (nominally) 29.6VDC. It's best to use batteries that are roughly equally charged. Both batteries power the 14.4 volt DC to DC converter nestled between the batteries.

The on-off switch has two positions, 12 and 24 volts. In the 12 V position, only the rear battery is connected and the DC-DC converter is disconnected. For a lightweight, 14 volt running rig, you might want to remove the forward battery, and/or use one Endura-7 battery. (Use two 7's for a lightweight 24 volt rig).

Paralleling the batteries for 12v

For use with the Panavision® Genesis® (a 12 volt, high amp draw camera), it's possible to change a jumper so that both batteries provide power to the camera.

Remove four screws that hold the forward battery mount.

Normally, the red stripe wire is connected to the other red stripe wire (for 24 volts and 14 volts via the converter or 12 volts via the rear battery). Carefully pull apart the connectors, and pull out the solid red wire. Connect the solid red wire to the red stripe wire. This will connect the two batteries in parallel and disconnect the converter from the circuit. 24 volts is not possible with only two batteries in this mode.

However, if you also want 24 volts in this 12 volt/parallel mode, a third PowerCube™ battery can be added via an accessory IDX battery plate and special plug for the auxiliary power connector.

The LEDs on the battery mount will blink when the low battery threshold is reached. For the Ultra²®, this feature will only work when FLG/Voltmeter box is installed (see Section F). The circuit breakers in battery mount are the standard automotive type.

The battery mount pivots approximately 180º to facilitate static and dynamic balancing, and for inertial control. Pivoting the battery all the way down will enable it to get closer to the sled, reducing pan inertia and/or helping to balance very heavy cameras. Pan inertia is maximized with the batteries horizontal and the battery rods fully extended.

Discharge rate

As your Lithium-Ion PowerCube™ batteries are used, the voltage drops at a fairly regular rate. However, the sample 30 watt discharge chart shows some interesting information. Hot off the charger, a single battery will read 16.8 volts, but within a minute drops to 16.1 volt when under load. This is normal, and not a cause for concern or an indication of a weak battery.

At the 30 watt discharge rate, the battery voltage drops slowly for about 3 hours from 16.1 volts to the “knee” voltage of 13.8 volts – slightly faster at the upper end, and more slowly as the battery is discharged. When the voltage reaches 13.8 volts, the voltage drops off very quickly to 11 volts (within 8 minutes). The batteries have a self-limiting cut-off of 11 volts.

Based on this discharge curve, we suggest you set the battery warning at 13.8 volts if your total load is about 30 watts and 8 minutes is enough warning time.

If you are working with 24 volt film cameras, where the load changes when the camera runs, you might set the battery warning higher, to 28.2 or more volts for the two batteries in series, again depending on the load, how much warning you need, etc. If the voltage drops below 26 volts when the camera is not running, you will not get any appreciable run time with most 35mm, 24 volt film cameras. To set the battery warning level, see the electronics section of this manual.

When running electrically noisy, or high current draw cameras or accessories, low voltage indicators may briefly appear. Voltage sag due to the large loads or excessive noise spikes on the power lines may surpass the threshold settings.

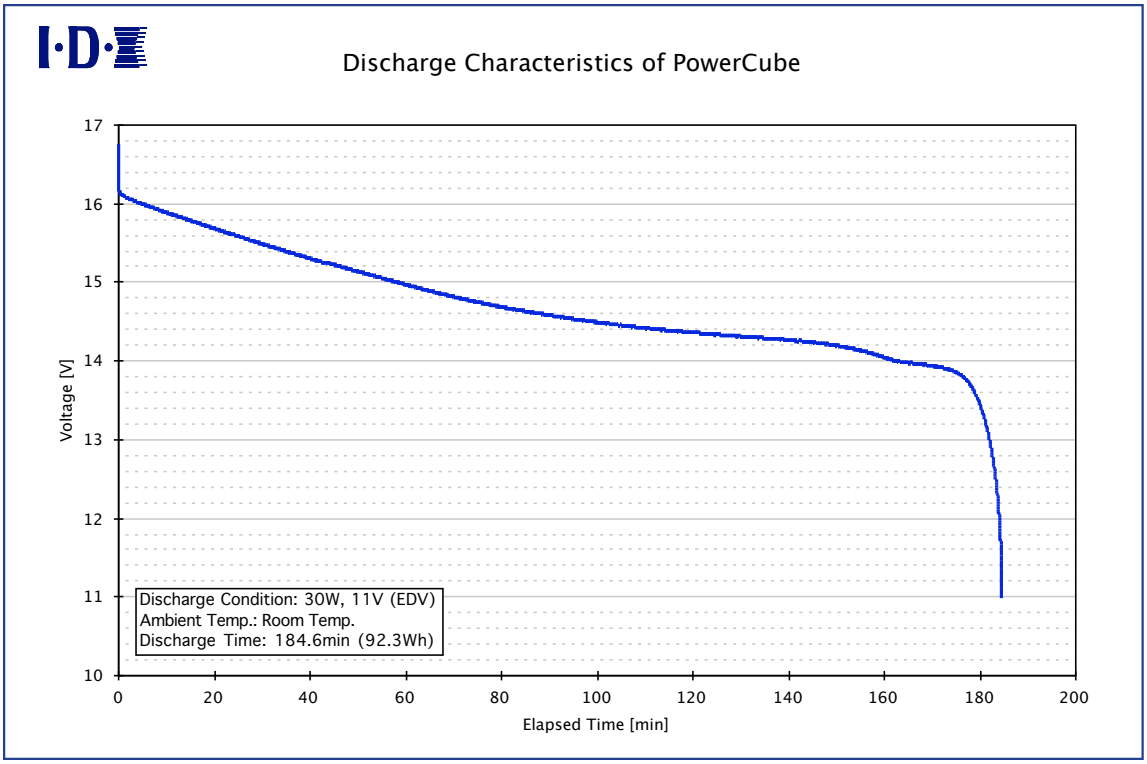

Charging your batteries

There is no memory effect with Lithium-Ion batteries. There is also no need to deep discharge your batteries to improve their response. Charging a completely discharged battery (11 volts) to fully charged (at 16.8 volts) with a 3.0 amp charge takes about 2 hours and 40 minutes, but the battery reaches 80% of a full charge (at about 16.5 volts) in just over 90 minutes. The last 20% of the charge cycle takes over an hour.

We suggest that if you have the time, fully charge your batteries. If you are in a hurry, however, charge them only for an hour and a half or less, as an 80% charge of these batteries is still a lot of watt-hours, and typically you are using two of them. Also don't discharge them much below 13.8 volts if possible.

If you have two of the IDX VL-4S chargers, split the batteries equally between the chargers. Although all batteries are charged simultaneously, with one, two, or three batteries on the charger, the charge current is 3.0 amps per battery. When the fourth battery is added to the charger, the charge current for each battery drops to 2.3 amps, which will increase the time it takes to charge each battery.

A word about 12 and 24 volts as used in the manual: 12 and 24 volts typically refer to the nominal voltages required by cameras and accessories, but the voltage range accepted by the device might be 10 to 16 volts or 20 to 34 volts. Each camera or accessory has its own range of useful voltages.

Different battery chemistries and numbers of cells typically result in nominal battery voltages of 14.4 or 14.8 volts, or with two batteries in series, 28.8 or 29.6 volts. The actual voltage in a battery might be from 11 to 17 volts, depending on charge and battery type. Nominal battery voltages are always higher than the nominal required by the device, so that when the battery is almost depleted, it still has more voltage than that required by the device.

Some "12 volt" connectors on the sled may have a regulated (fixed) output of 12 to 14.4 volts, regardless of the voltage of the batteries at any given moment.

TIFFEN®
Helping Create the World's Greatest Images™

The Tiffen Company, 90 Oser Avenue, Hauppauge, NY 11788
631-273-2500 • 1-800-645-2522 • www.tiffen.com
Tiffen Steadicam Operations, 2815 Winona Avenue, Burbank, CA 91504
Phone: 818-843-4600 • 818-843-8321

Vest: Ultra²®/Shadow™

p/n LIT-257010-I

STEADICAM®

Vest Parts

This vest is standard with the Ultra²® and Shadow™ stabilizer systems, optional for all other sleds. This vest also comes in a compact version.

Note: The vest must be properly adjusted for the emergency release system to work. The emergency release line (blue) should be taught and both cross back straps disconnected. See p312-313 of ***The Steadicam® Operator's Handbook***, for the quick release demo.

Fitting the Vest

The vest is the major connection between your body and the sled. It must be adjusted properly and feel good on your body. The vest is not intended to be a **straightjacket**. You should be able to move and breathe easily.

The socket block for the arm should move with you and not shift under load.

The overall length should be adjusted so that lifting your legs while taking a step up doesn't disturb the vest. The hip pads should comfortably grab your hips.

Start at the top

Be sure the shoulder pads are firmly down on your shoulders.

The chest pads are snugged up next. You should be able to breathe a little, but the vest should not be able to slip forward and down. Diaphragmatic breathing (like a baby) works best.

Push the vest down on your shoulders again, be sure the spar is vertical, then snug up the hip pads. If the hip pads are tightened first, the vest will tend to ride high until loaded, and then it will slip around under load.

Tip: While wearing the vest and resting between takes, release the vest straps to increase blood flow and ease tension in your muscles.

Lastly, snug up the cross back straps. This will prevent the vest from slipping as well as reduce side loading.

Tips:

- If the cross back straps are overtightened, they will cause the vest to improperly ride up on your shoulders.
- If the cross back straps don't cross your back, they won't work to support the side loads. Be sure they cross your back as shown.

For goofy foot operating (sled on your right) the socket block is easily flipped upside down and retightened on the vest spar.

Note: A few operators have body shapes or sizes that are out of the general range of adjustments. You may find you have to add or remove padding, shorten or extend straps, etc. to make the vest fit perfectly.

Available options: a compact vest, and longer chest, hip, and cross back straps.

For more information on fitting the vest and getting started, see Section Two of ***The Steadicam® Operator's Handbook***.

Pay close attention to the good fit of the vest in the photo above. It's very important how the shoulder pads contact the shoulders and the shoulder connectors are not too high (a common mistake).

The Tiffen Company, 90 Oser Avenue, Hauppauge, NY 11788
631-273-2500 • 1-800-645-2522 • www.tiffen.com
Tiffen Steadicam Operations, 2815 Winona Avenue, Burbank, CA 91504
Phone: 818-843-4600 • 818-843-8321

G-70x™ Arm: Ultra²®/Shadow™ stabilizers

p/n LIT-257010-J

STEADICAM®

The G-70x™ Arm

The G-70x™ arm has a total lifting capacity of 12 to 70 pounds and a 29” boom range. The arm also incorporates a ride control, a quick post change mechanism, an arm post drag control, and a kickback link.

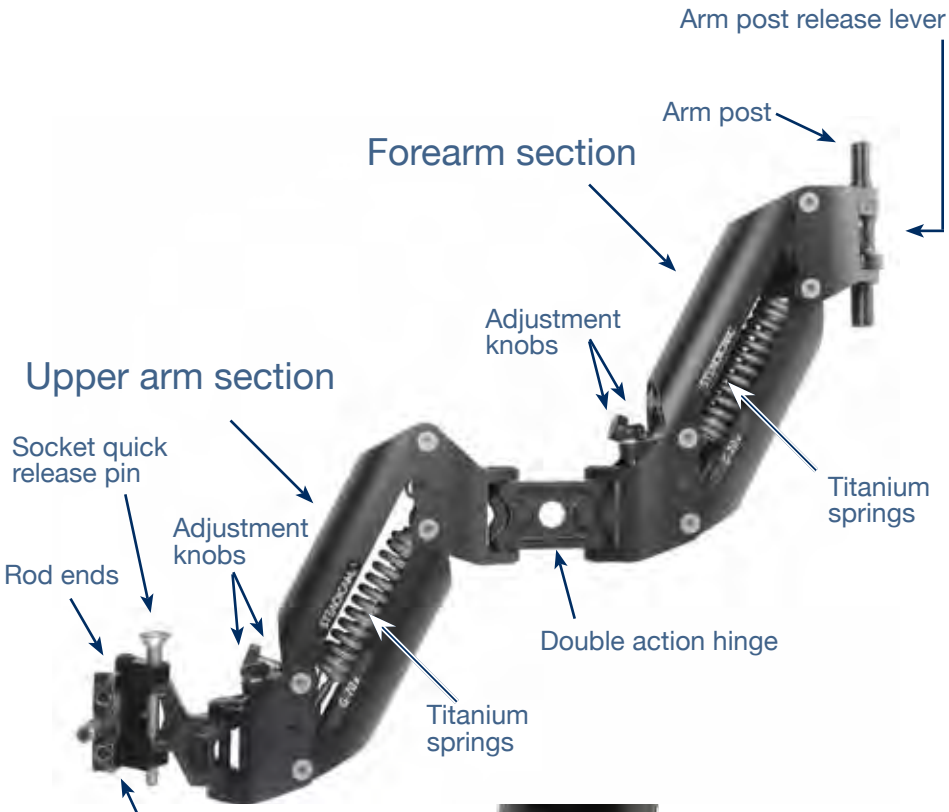

The G-70x™ arm socket is inserted into the socket block on the vest.

Adjusting the arm lift angle

Setting your threads is part of basic operating technique. Two adjustment screws in the socket block on the vest and two "rod ends" in the mating section of the arm determine the angle of lift of the arm. These two adjustments are your "threads." They are personal and critical for good operating.

Some combination of adjustment of these screws – and your physique and posture – will make the arm lift straight up when carrying the sled. The angles of adjustment are not directly "in-out" and "side to side," but rotated about 30 degrees clockwise (relative to the operator). We can suggest approximate threads to start, but the only way to test your threads is to pick up the sled and see what happens.

Side to side

For almost all operators, regardless of body type, the typical adjustment for the "side to side" screws (the rod ends in the arm) is 2 to 2.5 turns out on the top screw and ALWAYS all the way in on the bottom screw.

The two side to side screws work independently of one another. Do not tighten the lower screw, but be sure it is all the way in, and then back it out 1/8th of a turn to prevent binding.

In and out

Looking down at the top "in-and-out" screw. Count the threads indicated by the arrow. This is a typical adjustment for a person in reasonable shape.

The "in-out" adjustment on the socket block varies greatly by the operator's body type. If you have big pectorals and a flat stomach, the top screw is almost all the way in. If you've been eating well and exercising less, the top screw will be further out.

Always dial in the top screw first to your setting, then turn in the bottom screw until it just snugs up against the fitting. There is no need to tighten the bottom screw very hard.

With both pairs of screws properly adjusted, the camera will float in all positions with the operator standing relatively comfortably.

Goofy foot

If you want to operate "goofy-foot," — with the sled on the right side –you will need to reverse the socket block.

On the vest, loosen the socket block height adjustment screws. You may have to tap the plate hard with your fist to get everything to release. Flip the plate and retighten the clamp. Be sure the dovetail clamp properly mates with the beveled retainer.

On the arm, pull the "parachute pin," flip the mating block, and reinsert the parachute pin with the kick back link rotated (see page 6). Note that the mating block is now reversed; the upper side to side adjusting screw is now the lower screw and vice versa.

To set your threads, first dial the lower side to side screw all the way in, then adjust the upper screw to your threads - about 2 to 2.5 turns out. Use the same procedure to change back to left side operating.

Use a 1/4" allen to adjust the "side to side" screws. When wearing the rig, be sure to hold the centerpost in line with the "in-out" thumbscrews. This will take the loading off the side to side screws.

Basic adjustments: Ride and Lift

Each arm segment has two adjusting knobs:

The **Ride** knob alters iso-elasticity from a hard ride to an ultra-effortless iso-elastic ride — just shy of locking up at top and bottom.

The **Lift** knob dials lifting power continuously from 12 lbs to 70 lbs.

Adjustment of Ride

Ride is a new feature and it takes a few minutes to understand how it works, and how to make it work for you. In the field, it only takes a few seconds to get the exact performance you want from the G-70x™ arm.

If you can, preset Ride close to the desired level of iso-elasticity in both arm sections before picking up the sled and adjusting Lift.

Start by presetting the Ride knob to the middle of its travel (about 20 threads visible). Once you get the iso-elastic feel you like, make a note of the threads and the camera weight for future reference.

Ride can only be adjusted when the arm segment is raised to its highest, unloaded position, so it is easiest to adjust before you pick up the sled. It can also be adjusted when flying the sled by booming up fully.

The G-7x0™ arm becomes progressively less iso-elastic as the arm's lift is increased. Heavier loads will require a counterclockwise adjustment of the Ride knob to obtain – or maintain – the desired iso-elasticity. Lighter loads will require a clockwise adjustment of the Ride knob to decrease iso-elasticity.

Turning the Ride knob also has a slight effect on the lifting power of the arm. So preset the Ride as best you can and then adjust the arm's lift.

The stops at both ends of travel of the Ride knob should not be forced.

Adjusting the ride: the arm must be angled up at the top of its range. Note: the ride knob is horizontal, the lift knob is vertical.

Adjustment of Lift:

All lift adjustments must be done while wearing the rig, so pick up the sled. Stand in the classic Missionary position and properly set your threads before proceeding.

Adjust the "forearm" section first (the arm section closest to the gimbal). Hold the arm segment slightly above level. When the coaxial springs are perpendicular to the adjusting mechanism, the spring force is neutral — neither up nor down — reducing the effort needed to turn the knob.

Slightly raise or lower the arm segment to find the sweet spot. Adjust the arm's lifting power so that the arm section seeks a position slightly above horizontal.

When the forearm section is set correctly, adjust the upper arm section to follow (track with) the upper arm section as you boom fully up and down. Do not worry if the arm tends to lock up or down at this point.

Note that the Lift knob has a range of adjustment of 32 turns. This means that each turn of the Lift knob will add or subtract about 1.5 lbs (.68kg) of lift.

Re-adjust the Ride knob for the desired iso-elastic response

With the arm set to carry the load, you can micro-adjust Ride for any given load.

In general, most operators will want the most iso-elastic possible ride. To adjust the arm for maximum iso-elasticity at any given lift, turn the ride knob counterclockwise until the arm section begins to "lock" up or down at the extremes of travel. Then turn the ride knob clockwise a couple of turns. This will keep the arm from locking up or down. Test and micro-adjust the lift and ride knobs as necessary.

Typically, the arm is very forgiving of less than "perfect" adjustments of lift and ride. Some operators will set the arm sections at a higher nominal angle (+20º or more), to minimize any lifting required with heavier cameras and/or high boom heights. Pushing down is easier than lifting fully with the extended boom range possible with the G-70x™ arm.

The arm can also be adjusted to hang lower than normally for shots with low boom heights, with very little penalty in performance. Minor changes in sled weight (+/- several lbs/kg) do not require adjustment of the ride knob.

Some operators prefer a more centered ride (like a IIIA arm with a less than maximum load), or a more centered ride when hard-mounted on rough terrain. Experiment and use the arm the way you like it.

Some adjustment tips:

When adjusting from a light load to a heavy load: It helps to have an assistant independently control the height of the upper arm and make his lift adjustment at the same time as you adjust the forearm lift.

It also helps if you raise your docking stand so you can stand next to it and insert the arm post into the gimbal yoke of your docked sled with your heavy camera aboard. As you and your assistant adjust the lift of both arm segments, they will gradually pick up the weight until it floats free of the dock.

When adjusting from a heavy load to a light load: Leave the heavy load aboard if possible, and with the sled on the stand, remain adjacent to the stand while you lighten the lift of both arm sections at the same time. Then remove the heavy weight and rebalance the sled for the light camera and then see if the lift needs further adjustment.

Lift can be altered by forcefully holding the arm segments at the correct angle while adjusting, but be prepared for some exertion! You might be shocked how energetic the springs feel if you are raising or lowering the lift by 30 lbs (14kg)!

The G-70x™ arm “kick back” connector

To accommodate both regular and goofy-foot operators, the two mating parts held by the “parachute” pin can fit together in two ways. The design intent is to “kick back” the upper arm segment as shown in the photos. When “kicked-back,” the arm moves further out of the way while operating with the sled more in front of you or to the arm mounting side. The parts need to be set one way for regular operating, and the opposite way for goofy foot operating.

Regular

Goofy-foot

With a back mounted vest

Operators with “back mounted” vests should also orient the connection to send the arm to the inside.

When using a back mounted vest, set the kickback link inwards as shown in the photo. This is the opposite direction from the kickback link’s use in a front mounted vest. The idea is to get the socket block both closer to the body and to the sled. Why? See the next tip.

When using any back mounted vest, all arms are more extended from the load (the sled) to the attachment point (the socket block). Additionally, the “end block” nearest the body is pointing fore-aft. With a normal, front-mounted vest, the arm extension is less and the end block is oriented sideways to the load.

Extending any arm makes it more likely to go over centers and lock up.

When you lean back with a back mounted vest, the upper arm section’s end block leans back in line with the upper arm section. (With a front mount vest, the end block rotates perpendicular to the upper arm section as you lean back). With a back mounted vest, this leaning back puts the end block in a more iso-elastic position, making the upper arm section more likely to go over centers and lock up.

All arms behave this way, but the consequences become evident with an extended range (+/- 70 degree) and very iso-elastic arm like the G-70x™ arm or G-50x™ arm. The travel in most other arms is restricted to +/-50 degrees, and this effect occurs above that angle.

The solution is to have about one-half the “iso” help (1/2 the threads) in the upper arm section that one has in the forearm section. You fine tune the adjustment the same way as described on page 5, increasing the iso-elastic response until the arm starts to lock up, then dialing it back in a few turns.

Walking with a back mounted vest also “activates” the socket block more than with a front mounted vest; it rocks back and forth in line with the upper arm section, again with consequences for the arm’s response. It may require an even smaller “less iso” link.

If you leave the forearm fully iso, it has the “helper torque” throughout its range, low to high, and when the arm is extended, it tends to force the upper arm over centers. Consequently, you should not only reduce the iso for the upper arm link with a back mounted vest, but also reduce the iso for the forearm. That way when raised, the operator is lifting a little, the torque is reduced correspondingly and the transferred torque is likewise reduced – hence a smaller tendency for the upper arm section to go over centers. Even with the iso dialed down, the G-70x™ arm’s response in the +/- 50 degree range is more iso-elastic than other arms.

Tip: Many operators with front mount vests have removed the stopper for the socket block spring. If you do this, also change the kickback link to the forward position (like the back mount photo). It’s a bit harder to insert the arm into the socket block, but the range of motion is increased.

Working with arm posts

Changing arm posts

To change posts, rotate the mechanism to expose the release lever. Raise the lever to horizontal to unlock the post. Note: the mechanism will remain in place. Replace post with desired length post, leaving at least 1.125in (29mm) protruding above the arm. Clamp by rotating lever back to vertical.

Rotational drag

To set the rotational drag, turn the drag knob clockwise to increase drag and counterclockwise to decrease drag. Changing a post does not affect the drag setting.

General uses

In general, use the shortest possible post in the arm. This avoids possible clearance problems below the arm.

The quickest way to increase lens height is to use a longer post in the arm and to raise the socket block on the vest. This increase in gimbal height (and therefore lens height) - up to 11.5in (29cm) - puts the gimbal about as high as one can comfortably reach with the operating hand. A longer arm post could be used, but one can't reach the gimbal and do the most precise work.

Be aware that using a long arm post can exert enormous torque on the arm bearings and bones. The heavier the camera is, the shorter the arm post should be. If you want a very high or low lens height, get a light camera!!

Remember, a long arm post alters the height of all the components equally, which may make viewing the monitor more difficult or annoying. Check to see what works; every situation is a little different. The ability to quickly change arm posts or to adjust the height of the socket block on the vest, and/or to extend the sled components, (all without tools!) gives the operator many choices to achieve a given range of lens heights and viewing options.

The Tiffen Company, 90 Oser Avenue, Hauppauge, NY 11788
631-273-2500 • 1-800-645-2522 • www.tiffen.com
Tiffen Steadicam Operations, 2815 Winona Avenue, Burbank, CA 91504
Phone: 818-843-4600 • 818-843-8321

CineMonitorHDevolution

p/n LIT-257010-K

STEADICAM®

The Tiffen Company, 90 Oser Avenue, Hauppauge, NY 11788
631-273-2500 • 1-800-645-2522 • www.tiffen.com
Tiffen Steadicam Operations, 2815 Winona Avenue, Burbank, CA 91504
Phone: 818-843-4600 • 818-843-8321