PRODUCT INFORMATION AND TECHNICAL DATA

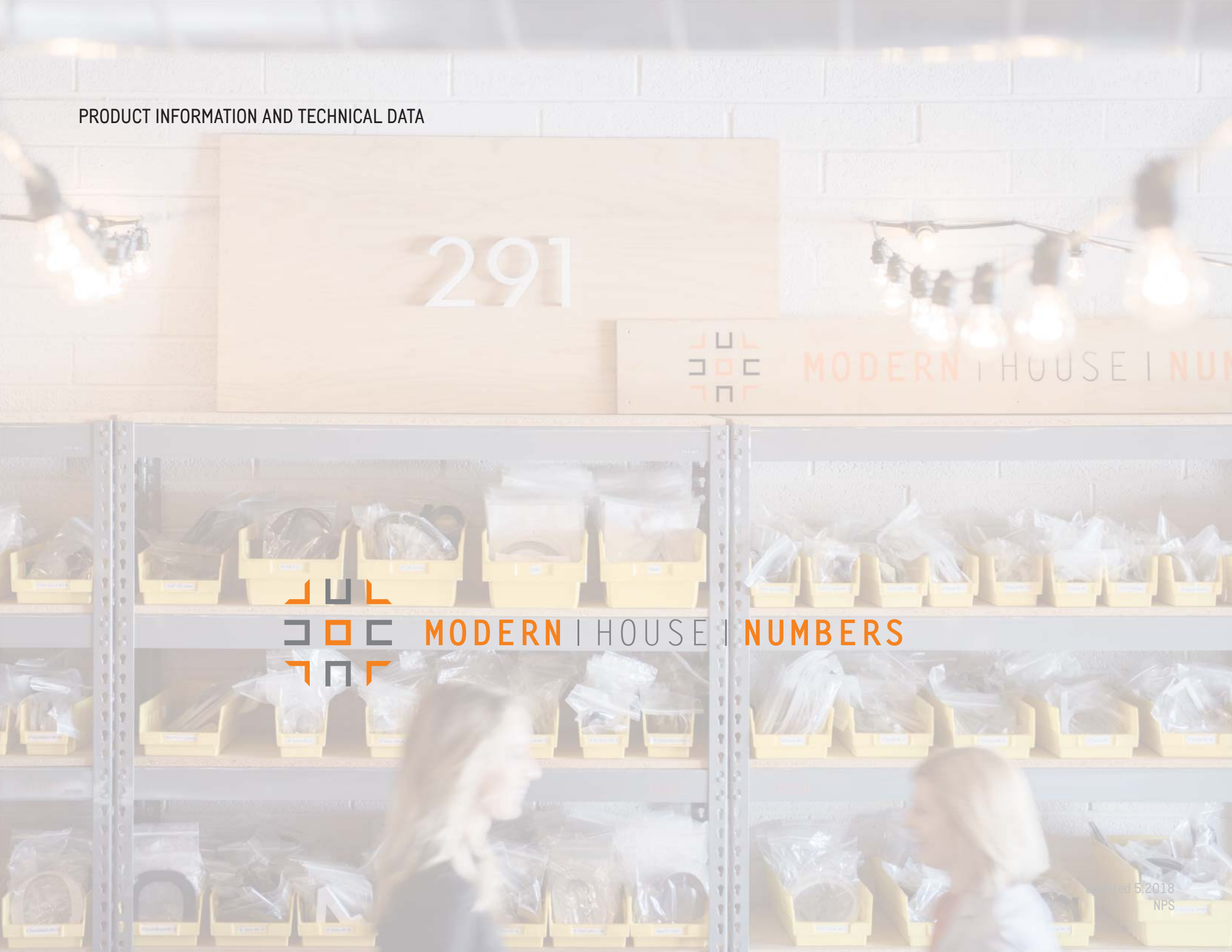

MODERN | HOUSE | NUMBERS

Updated 5.2018
NPS

GENERAL PRODUCT INFORMATION

CUSTOM MADE ALUMINUM AND POWDER COATED NUMBERS, LETTERS AND SYMBOLS, AND PLAQUES

SIZES: Aluminum or powder coated house numbers and letters available in : 4", 6", 8", 12" and/or 15" high. Additional sizes and custom symbols available upon request. See dimensional charts for specific character heights and widths.

PLAQUE SIZES: Aluminum or powder coated plaques sizes available in the following sizes: 5", 7" and 10" diameter circle, 8"x8" square, 3x8", 4x11, and 5"x16" rectangle. Additional sizes available upon request. Refer to Visibility Chart for plaque viewing distances.

FONTS: Aluminum and powder coated house numbers available in six standard typefaces: Palm Springs, SoCal, Austin, Backbay, Santa Barbara, Soho and South Beach. Additional fonts available with a nominal set up fee.

PLAQUE FONTS: Aluminum and powder coated plaques avilable in two standard typefaces: Palm Springs and SoCal. Text is stencil cut from solid 3/8" thick aluminum. Our other standard fonts availble upon request, at no charge. Custom fonts available with additional setup fee.

ALUMINUM FINISH: Aluminum products are finished with two coats of clear, matte sealant to protect them from UV, salt air and other environmental corrosives. Regular cleaning with water and mild soap required to maintain finish.

POWDER COATED FINISHES: Powder coat finishes are more durable that standard paint and are highly recommended for costal and industrial areas. Available in the following colors: white, matte black, matte bronze, and dark bronze. Additional colors available for large quanitities, upon request at additional fee.

MATERIAL: All aluminum and powder coated house numbers, letters, symbols and plaques are made from solid, 3/8" thick recycled aluminum.

HARDWARE: All aluminum and powder coated house numbers/plaques include 3/16" diameter x 2" long steel studs and 3/16" inside diameter x 1/2" long aluminum spacers. Hardware is concealed with proper installation. If a subtle shadow / floating effect is desired, aluminum standoffs are included to slide over studs. All aluminum and powder coated house numbers/plaques have 3/16" pre-drilled stud holes (not visible from face of number). See attached diagrams for more information.

EXTERIOR GRADE VINYL

SIZES: Available in 1", 2", 3", 4", 6", 8" and 12" high. Additional sizes available at no additional cost. See dimensional charts for heights and widths of specific characters.

COLORS: Available in silver, black, blue, brass, bronze, copper, green, orange and white. Visit moderhousenumbers.com for examples.

MATERIAL: Custom made from high quality exterior grade vinyl with a peel-and-stick adhesive backing. User removes *both* front and back layers. Note: Smooth, dry mounting surface required.

CURB STENCILS

SIZE: Curb Stencil text is 4" tall. Surrounding vinyl border is 1/2" on all sides. Note: 6" curb height recommended.

COLORS: Spray paint not included. Visit moderhousenumbers.com for list of recommended colors that coordinate with our exterior vinyl colors.

MATERIAL: Made from high quality exterior grade vinyl with a peel-and-stick adhesive backing. User removes *both* front and back layers. Note: smooth, dry surface required.

SUPPLIES REQUIRED FOR INSTALLATION - NOT INCLUDED

HOUSE NUMBERS AND PLAQUES: Drill, 11/64" drill bit (metal, wood or masonry depending on installation surface), hammer, epoxy (clear, muli-purpose and exterior grade) and masking tape. Also helpful are a rubber mallet, paper towels, ruler and level. Hammer drill for stone and concrete surfaces may be required. See installation tips for more information.

VINYL: Ruler, masking tape and materials to clean mailbox prior to insulation. See attached for additional installation tips. Viny productsl wll not stick if surface is cold/frozen, wet, rough,or dirty.

PRODUCT DIMENSIONS ALUMINUM AND POWDER COATED LETTERS, NUMBERS, SYMBOLS AND PLAQUES, AND MAILBOX VINYL

*1",2",+ 3" AVAILBLE IN VINYL ONLY

PALM SPRINGS TYPEFACE: NUMBERS

NPS

	vinyl-only sizes			number width - aluminum and vinyl					quantity of pre-drilled stud holes				
	*1"	*2"	*3"	4"	6"	8"	12"	15"	4"	6"	8"	12"	15"
0	1.00	2	3	4	6	8	12	15	2	2	2	4	4
1	0.25	0.5	0.88	1.13	1.66	2.25	3.50	4.13	2	2	2	3	3
2	0.75	1.375	2.13	2.88	4.27	5.75	8.50	10.63	2	2	2	4	4
3	0.75	1.5	2.25	2.88	4.40	5.88	8.63	10.75	2	2	2	4	4
4	0.75	1.625	2.38	3.13	4.68	6.25	9.38	11.75	2	2	2	4	4
5	0.75	1.375	2.13	2.63	4.20	5.63	8.38	10.50	2	2	2	4	4
6	0.75	1.5	2.13	2.88	4.32	5.75	8.63	10.75	2	2	2	4	4
7	0.75	1.375	2.13	2.88	4.27	5.75	8.50	10.63	2	2	2	4	4
8	0.75	1.375	2.13	2.88	4.26	5.63	8.50	10.63	2	2	2	4	4
9	0.75	1.5	2.13	2.88	4.32	5.75	8.63	10.75	2	2	2	4	4
					QUICKSHIP ELIGIBLE					*QUICKSHIP ELIGIBLE*			

>>*QUICKSHIP* eligible products leave our warehouse the next business day. 6", 'Palm Springs' in brushed aluminum and matte black only.

PALM SPRINGS TYPEFACE: UPPERCASE LETTERS

NPS

	vinyl-only sizes		letter width					
	1"	2"	3"	4"	6"	8"	12"	15"
A	0.88	1.88	2.75	3.63	5.50	7.38	11.00	13.75
B	0.75	1.50	2.25	3.00	4.38	5.88	8.88	11.13
C	1.00	2.00	3.00	4.00	6.00	8.00	12.00	15.00
D	0.88	1.63	2.50	3.38	5.00	6.75	10.13	12.63
E	0.63	1.25	2.00	2.63	3.88	5.25	7.88	9.75
F	0.63	1.25	1.88	2.63	3.88	5.13	7.75	9.63
G	1.00	2.00	3.00	4.00	6.00	7.88	11.88	14.88
H	0.75	1.63	2.38	3.25	4.75	6.38	9.63	12.00
I	0.13	0.25	0.38	0.38	0.63	0.88	1.25	1.63
J	0.75	1.50	2.25	2.88	4.38	5.88	8.75	11.00
K	0.75	1.38	2.13	2.75	4.13	5.50	8.38	10.38
L	0.63	1.25	1.88	2.38	3.63	4.88	7.25	9.13
M	1.00	2.00	3.13	4.13	6.13	8.25	12.38	15.50
N	0.88	1.63	2.50	3.38	5.00	6.63	10.00	12.50
O	1.00	2.00	3.00	4.00	6.00	8.00	12.00	15.00
P	0.63	1.38	2.00	2.75	4.13	5.38	8.25	10.13
Q	1.00	2.00	3.13	4.13	6.13	8.25	12.25	15.38
R	0.63	1.38	2.00	2.75	4.13	5.38	8.25	10.25
S	0.75	1.38	2.13	2.88	4.25	5.63	8.50	10.63
T	0.75	1.50	2.38	3.13	4.63	6.25	9.25	11.63
U	0.75	1.50	2.25	3.00	4.50	6.13	9.13	11.38
V	0.88	1.88	2.75	3.63	5.50	7.38	11.00	13.75
W	1.38	2.75	4.25	5.63	8.38	11.25	16.75	21.00
X	0.88	1.75	2.75	3.63	5.38	7.25	10.75	13.50
Y	0.75	1.50	2.25	3.00	4.50	6.00	9.00	11.25
Z	0.75	1.63	2.38	3.25	4.88	6.38	9.63	12.00

	quantity of pre-drilled stud holes				
	4"	6"	8"	12"	15"
A	2	2	3	4	4
B	2	2	3	4	4
C	2	2	3	4	4
D	2	2	3	4	4
E	2	2	3	5	5
F	2	2	3	4	4
G	2	2	3	4	4
H	2	2	4	5	5
I	2	2	2	3	3
J	2	2	2	3	3
K	2	2	4	5	5
L	2	2	3	3	3
M	2	2	4	5	5
N	2	2	4	4	4
O	2	2	2	4	4
P	2	2	3	4	4
Q	2	2	3	4	4
R	2	2	3	4	4
S	2	2	2	3	3
T	2	2	2	3	3
U	2	2	3	4	4
V	2	2	3	3	3
W	2	2	4	5	5
X	2	2	4	5	5
Y	2	2	2	3	3
Z	2	2	3	4	4

PALM SPRINGS TYPEFACE: LOWERCASE LETTERS

NPS

	vinyl-only sizes		letter width					
	1"	2"	3"	4"	6"	8"	12"	15"
a	0.50	1.00	1.50	2.00	3.00	4.13	6.13	7.63
b	0.63	1.25	1.75	2.38	3.63	4.75	7.25	9.00
c	0.50	1.13	1.63	2.13	3.25	4.25	6.50	8.13
d	0.63	1.25	1.75	2.38	3.63	4.75	7.25	9.00
e	0.63	1.25	1.75	2.38	3.63	4.75	7.13	9.00
f	0.38	0.75	1.25	1.63	2.38	3.13	4.75	6.00
g	0.63	1.25	1.88	2.38	3.63	4.88	7.25	9.13
h	0.50	1.00	1.63	2.13	3.13	4.25	6.25	7.88
i	0.13	0.25	0.38	0.50	0.75	1.13	1.63	2.00
j	0.38	0.75	1.13	1.63	2.38	3.13	4.75	6.00
k	0.50	1.00	1.50	2.13	3.13	4.13	6.25	7.75
l	0.25	0.50	0.88	0.38	0.63	0.88	1.25	1.63
m	0.88	1.75	2.63	3.50	5.25	7.00	10.50	13.00
n	0.50	1.00	1.63	2.13	3.13	4.25	6.25	7.88
o	0.63	1.13	1.75	2.38	3.50	4.63	7.00	8.75
p	0.63	1.25	1.75	2.38	3.63	4.75	7.25	9.00
q	0.63	1.25	1.75	2.38	3.63	4.75	7.25	9.00
r	0.38	0.75	1.00	1.38	2.13	2.75	4.13	5.13
s	0.50	0.88	1.38	1.75	2.63	3.50	5.25	6.63
t	0.38	0.75	0.75	1.63	2.38	3.13	3.88	6.00
u	0.50	1.00	1.00	2.38	3.13	4.25	6.25	7.88
v	0.63	1.25	1.75	2.38	3.63	4.75	7.13	8.88
w	0.88	1.75	2.75	3.63	5.38	7.13	10.75	13.50
x	0.50	1.13	1.63	2.25	3.38	4.50	6.75	8.38
y	0.63	1.13	2.00	2.25	3.38	4.63	6.88	8.63
z	0.50	1.00	1.50	2.00	2.88	3.88	5.75	7.38

	quantity of pre-drilled stud holes				
	4"	6"	8"	12"	15"
a	2	2	2	3	3
b	2	2	3	3	3
c	2	2	2	3	3
d	2	2	3	3	3
e	2	2	2	3	3
f	2	2	2	3	3
g	2	2	2	4	4
h	2	2	3	4	4
i	3	3	3	3	3
j	3	3	3	4	4
k	2	2	3	4	4
l	2	2	2	3	3
m	2	2	2	4	4
n	2	2	2	3	3
o	2	2	2	3	3
p	2	2	3	3	3
q	2	2	3	3	3
r	2	2	2	3	3
s	2	2	2	3	3
t	2	2	2	3	3
u	2	2	2	3	3
v	2	2	2	3	3
w	2	2	2	4	4
x	2	2	2	4	4
y	2	2	2	3	3
z	2	2	2	3	3

SOCAL TYPEFACE: NUMBERS

	vinyl only sizes		number width - aluminum and vinyl					
	*1"	*2"	*3"	4"	6"	8"	12"	15"
0	1	2	3	4	6	8	12	15
1	0.25	0.25	0.5	0.67	1	1.33	2	2.5
2	0.5	1	1.59	2.12	3.18	4.24	6.36	7.95
3	0.5	1	1.54	2.06	3.09	4.12	6.17	7.72
4	0.5	1	1.52	2.02	3.04	4.05	6.07	7.59
5	0.5	1	1.48	1.97	2.96	3.94	5.91	7.39
6	0.75	1.5	2.25	3	4.52	6	9.02	11.27
7	0.5	0.75	1.18	1.57	2.36	3.15	4.72	5.9
8	0.75	1.25	2.06	2.75	4.12	5.5	8.25	10.31
9	0.75	1.5	2.25	3	4.52	6	9.02	11.27

	quantity of pre-drilled stud holes				
	4"	6"	8"	12"	15"
0	2	2	2	4	4
1	2	2	2	3	3
2	2	2	2	3	4
3	2	2	2	3	3
4	2	2	2	3	3
5	2	2	2	3	3
6	2	2	2	4	4
7	2	2	2	3	3
8	2	2	2	3	4
9	2	2	2	4	4

SOCAL TYPEFACE: UPPERCASE LETTERS

	letter width				
	4"	6"	8"	12"	15"
A	1.51	2.27	3	4.5	5.7
B	1.79	2.7	3.6	5.4	6.7
C	1.99	2.99	4	6	7.4
D	2.29	3.43	4.6	6.9	8.6
E	1.36	2.02	2.7	4	5.1
F	1.33	2	2.7	4	5.1
G	1.99	2.99	4	6	7.5
H	1.5	2.4	3.1	4.7	5.9
I	0.3	0.4	0.6	0.9	1.2
J	0.9	1.3	1.8	2.7	3.3
K	1.5	2.1	2.8	4.3	5.4
L	1	1.6	2	3.1	3.9
M	2.6	3.8	5	7.7	9.5
N	1.4	2.1	2.9	4.3	5.3
O	4	6	8	12	15
P	1.8	2.8	3.7	5.5	6.9
Q	4	6	8	12	15
R	1.8	2.8	3.7	5.5	6.9
S	1.2	1.9	2.4	4	5
T	1.2	1.8	2.5	3.7	4.6
U	1.4	2	2.7	4.1	5.1
V	1.8	2.7	3.8	5.5	7.1
W	2.9	4.3	5.8	8.7	10.8
X	1.8	2.7	3.6	5.4	6.7
Y	1.9	2.9	3.9	5.8	7.3
Z	1.3	2	2.5	4.1	5.2

	quantity of pre-drilled stud holes				
	4"	6"	8"	12"	15"
A	3	3	3		
B	2	2	3		
C	2	3	3		
D	2	3	3		
E	2	2	2		
F	2	2	2		
G	2	3	3		
H	3	2	2		
I	2	2	2		
J	2	2	2		
K	2	3	3		
L	2	2	2		
M	3	3	3		
N	2	2	3		
O	2	2	2		
P	2	3	3		
Q	2	2	2		
R	2	3	3		
S	2	2	2		
T	2	2	2		
U	3	3	2		
V	3	3	3		
W	3	3	3		
X	2	2	3		
Y	2	2	3		
Z	2	2	2		

AUSTIN TYPEFACE: NUMBERS

	vinyl-only sizes			number width - aluminum and vinyl				
	*1"	*2"	*3"	4"	6"	8"	12"	15"
0	0.85	1.7	2.6	3.4	5.05	6.7	10.05	12.6
1	0.15	0.3	0.45	0.56	0.85	1.15	1.70	2.10
2	0.60	1.1	1.60	2.15	3.20	4.25	6.40	8.00
3	0.65	1.25	1.85	2.40	3.60	4.80	7.20	9.00
4	0.65	1.25	1.85	2.40	3.60	4.80	7.20	9.00
5	0.70	1.4	2.10	2.70	4.05	5.40	8.10	10.10
6	0.70	1.4	2.10	2.70	4.05	5.40	8.10	10.10
7	0.60	1.1	1.65	2.15	3.20	4.30	6.40	8.00
8	0.70	1.4	2.10	2.70	4.05	5.80	8.10	10.10
9	0.70	1.4	2.10	2.70	4.05	5.40	8.10	10.10

	quantity of pre-drilled stud holes				
	4"	6"	8"	12"	15"
0	2	2	2	4	4
1	2	2	2	3	3
2	2	2	2	4	4
3	2	2	2	4	4
4	2	2	2	4	4
5	2	2	2	4	4
6	2	2	2	4	4
7	2	2	2	4	4
8	2	2	2	4	4
9	2	2	2	4	4

AUSTIN TYPEFACE: UPPERCASE LETTERS

	vinyl-only sizes		letter width					
	1"	2"	3"	4"	6"	8"	12"	15"
A	0.80	1.60	2.40	3.10	4.70	6.20	9.30	11.65
B	0.65	1.25	1.85	2.40	3.65	4.80	7.20	9.00
C	0.80	1.60	2.35	3.10	4.60	6.10	9.20	11.50
D	0.70	1.40	2.10	2.75	4.10	5.50	8.20	10.20
E	0.60	1.15	1.70	2.20	3.30	4.40	6.50	8.15
F	0.60	1.15	1.70	2.20	3.30	4.40	6.50	8.10
G	0.85	1.75	2.60	3.40	5.10	6.80	10.20	12.80
H	0.65	1.25	1.85	2.40	3.65	4.80	7.20	9.00
I	0.10	0.20	0.30	0.35	0.60	0.75	1.00	1.20
J	0.55	1.10	1.60	2.10	3.10	4.10	6.10	7.60
K	0.60	1.20	1.75	2.30	3.45	4.60	6.80	8.50
L	0.55	1.10	1.70	2.20	3.30	4.40	6.50	8.10
M	0.95	1.85	2.70	3.65	5.50	7.25	10.85	13.55
N	0.70	1.40	2.05	2.70	4.00	5.35	8.00	10.00
O	0.85	1.7	2.6	3.4	5.05	6.7	10.05	12.6
P	0.60	1.10	1.70	2.20	3.30	4.40	6.60	8.10
Q	0.85	1.70	2.60	3.40	5.10	7.00	10.10	12.75
R	0.70	1.35	2.00	2.65	4.00	5.20	7.85	9.80
S	0.60	1.25	1.75	2.30	3.40	4.60	6.80	8.55
T	0.70	1.40	2.10	2.70	4.10	5.40	8.10	10.10
U	0.65	1.30	1.90	2.50	3.80	5.10	7.50	9.40
V	0.70	1.40	2.10	2.80	4.20	5.50	8.30	10.30
W	1.00	2.00	3.00	3.90	5.85	7.80	11.60	14.50
X	0.75	1.50	2.20	2.90	4.40	5.80	8.70	10.85
Y	0.65	1.30	1.90	2.50	3.80	5.00	7.50	9.30
Z	0.60	1.20	1.70	2.30	3.30	4.40	6.50	8.15

	quantity of pre-drilled stud holes				
	4"	6"	8"	12"	15"
A	2	3	3	4	4
B	2	3	3	4	4
C	2	3	3	4	4
D	2	3	3	4	4
E	2	2	3	5	5
F	2	2	3	4	4
G	2	3	3	4	4
H	2	3	4	5	5
I	2	2	2	3	3
J	2	2	2	3	3
K	2	3	4	5	5
L	2	2	3	3	3
M	2	3	4	5	5
N	2	3	4	4	4
O	2	2	2	4	4
P	2	3	3	4	4
Q	2	2	3	4	4
R	2	3	3	4	4
S	2	2	2	3	3
T	2	2	2	3	3
U	2	3	3	4	4
V	2	3	3	3	3
W	2	3	4	5	5
X	2	3	4	5	5
Y	2	2	2	3	3
Z	2	2	3	4	4

AUSTIN TYPEFACE: LOWERCASE LETTERS

	vinyl-only sizes		letter width					
	1"	2"	3"	4"	6"	8"	12"	15"
a	0.50	0.95	1.45	1.80	2.80	3.70	5.55	6.90
b	0.50	1.00	1.50	1.90	2.90	3.80	5.75	7.10
c	0.50	0.90	1.40	1.80	2.65	3.55	5.30	6.60
d	0.50	1.00	1.50	1.90	2.90	3.80	5.75	7.10
e	0.50	0.95	1.40	1.80	2.75	3.65	5.50	6.75
f	0.30	0.55	0.80	1.00	1.55	2.10	3.10	3.80
g	0.50	1.00	1.50	1.90	2.90	3.85	5.75	7.10
h	0.50	1.00	1.50	2.00	3.00	3.95	5.90	7.35
i	0.20	0.40	0.65	0.40	0.55	0.70	1.00	3.00
j	0.30	0.45	0.80	1.00	1.55	2.10	3.10	3.80
k	0.50	0.90	1.35	1.80	2.65	3.55	5.20	6.50
l	0.30	0.55	0.80	1.00	1.55	2.10	3.00	3.80
m	0.95	1.80	2.70	3.60	5.40	7.15	10.75	13.40
n	0.55	1.00	1.50	2.00	3.00	3.95	5.90	7.30
o	0.55	1.00	1.50	1.95	2.90	3.85	5.70	7.10
p	0.50	1.00	1.50	1.90	1.90	3.80	5.75	7.10
q	0.50	1.00	1.50	1.90	1.90	3.80	5.75	7.10
r	0.40	0.70	1.00	1.30	2.00	2.65	3.85	4.80
s	0.55	1.00	1.50	2.00	2.95	3.90	5.80	7.20
t	0.30	0.55	0.80	1.10	1.55	2.10	3.80	3.80
u	0.55	1.00	1.50	2.00	3.00	3.95	5.90	7.30
v	0.55	1.10	1.55	2.10	3.10	4.10	6.10	7.60
w	0.80	1.55	2.35	3.00	4.55	6.10	9.00	11.25
x	0.55	1.10	1.60	2.10	3.20	4.20	6.20	7.85
y	0.55	1.10	1.60	2.10	3.10	4.10	6.10	7.60
z	0.40	0.80	1.20	1.60	2.30	3.10	4.60	5.70

	quantity of pre-drilled stud holes				
	4"	6"	8"	12"	15"
a	2	2	2	3	3
b	2	2	3	3	3
c	2	2	2	3	3
d	2	2	3	3	3
e	2	2	2	3	3
f	2	2	2	3	3
g	2	2	2	4	4
h	2	2	3	4	4
i	3	3	3	3	3
j	3	3	3	4	4
k	2	2	3	4	4
l	2	2	2	3	3
m	2	2	2	4	4
n	2	2	2	3	3
o	2	2	2	3	3
p	2	2	3	3	3
q	2	2	3	3	3
r	2	2	2	3	3
s	2	2	2	3	3
t	2	2	2	3	3
u	2	2	2	3	3
v	2	2	2	3	3
w	2	2	2	4	4
x	2	2	2	4	4
y	2	2	2	3	3
z	2	2	2	3	3

BACKBAY TYPEFACE

	vinyl only sizes			number width - aluminum and vinyl						quantity of pre-drilled stud holes				
	*1"	*2"	*3"	4"	6"	8"	12"	15"		4"	6"	8"	12"	15"
0	0.5	0.75	1.16	1.55	2.32	3.09	4.64	5.8	0	2	2	2	4	4
1	0.25	0.5	0.71	0.94	1.41	1.88	2.82	3.52	1	2	2	2	3	3
2	0.5	0.75	1.17	1.56	2.34	3.12	4.67	5.84	2	2	2	2	3	3
3	0.5	0.75	1.17	1.56	2.34	3.12	4.67	5.84	3	2	2	2	3	3
4	0.5	1	1.32	1.76	2.65	3.53	5.29	6.62	4	2	2	2	3	3
5	0.5	0.75	1.16	1.55	2.32	3.09	4.64	5.8	5	2	2	2	3	3
6	0.5	0.75	1.16	1.55	2.32	3.09	4.64	5.8	6	2	2	2	3	3
7	0.5	0.75	1.21	1.62	2.44	3.25	4.87	6.09	7	2	2	2	3	3
8	0.5	0.75	1.16	1.55	2.32	3.09	4.64	5.8	8	2	2	2	3	3
9	0.5	0.75	1.16	1.55	2.32	3.09	4.64	5.8	9	2	2	2	3	3

SOHO TYPEFACE

	vinyl only sizes			number width - aluminum and vinyl						quantity of pre-drilled stud holes				
	*1"	*2"	*3"	4"	6"	8"	12"	15"		4"	6"	8"	12"	15"
0	0.75	1.25	1.94	2.58	3.87	5.16	7.74	9.68	0	2	2	2	4	4
1	0.5	0.75	1.56	1.54	2.31	3.08	4.62	5.78	1	2	2	2	3	3
2	0.75	1.25	1.92	2.56	3.84	5.13	7.69	9.61	2	2	2	2	3	5
3	0.75	0.25	1.93	2.57	3.85	5.14	7.71	9.64	3	2	2	2	4	4
4	0.75	1.25	2.05	2.74	4.11	5.48	8.22	10.27	4	2	2	2	3	3
5	0.75	1.25	1.97	2.63	3.94	5.25	7.88	9.85	5	2	2	2	4	3
6	0.75	1.25	1.88	2.51	3.77	5.01	7.52	9.4	6	2	2	2	4	4
7	0.75	1.25	1.91	2.54	3.82	5.09	7.63	9.54	7	2	2	2	3	3
8	0.5	1.25	1.82	2.53	3.63	4.85	7.28	9.1	8	2	2	2	3	4
9	0.5	1.25	1.84	2.46	3.69	4.91	7.37	9.22	9	2	2	2	4	4

SANTA BARBARA TYPEFACE

	vinyl only sizes			number width - aluminum and vinyl				
	*1"	*2"	*3"	4"	6"	8"	12"	15"
0	1	2	2.84	3.79	5.67	7.6	11.4	14.25
1	0.25	0.75	1.02	1.37	2.05	2.73	4.1	5.12
2	0.75	1.75	2.5	3.34	5	6.67	10.01	12.51
3	1	1.75	2.65	3.7	5.31	7.08	10.61	13.27
4	1	2	2.82	3.76	5.65	7.54	11.31	14.14
5	1	1.75	2.7	3.6	5.41	6.74	10.82	13.52
6	1	1.75	2.69	3.58	5.37	7.16	10.74	13.42
7	1	1.75	2.67	3.56	5.36	7.15	10.73	13.36
8	1	1.75	2.69	3.58	5.36	7.2	10.72	13.40
9	1	1.75	2.69	3.58	5.36	7.15	10.73	13.41

	quantity of pre-drilled stud holes				
	4"	6"	8"	12"	15"
0	2	2	2	4	4
1	2	2	2	3	3
2	3	3	3	4	6
3	3	3	3	4	4
4	2	2	2	3	5
5	3	3	3	4	4
6	2	2	3	4	6
7	2	3	3	4	5
8	3	3	3	4	6
9	2	2	3	4	6

SOUTH BEACH TYPEFACE

	vinyl only sizes			number width - aluminum and vinyl				
	*1"	*2"	*3"	4"	6"	8"	12"	15"
0	1	1.75	2.75	3.66	5.49	7.32	10.99	13.73
1	0.25	0.25	0.5	0.67	1	1.33	2	2.5
2	0.75	1.75	2.46	3.28	4.91	6.55	9.83	12.29
3	0.75	1.5	2.3	3.08	4.61	6.15	9.23	11.54
4	1	1.75	2.79	3.72	5.58	7.44	11.17	13.96
5	0.75	1.75	2.51	3.35	5.02	6.69	10.04	12.54
6	0.75	1.75	2.55	3.4	5.11	6.81	10.22	12.77
7	0.75	1.75	2.54	3.38	5.08	6.77	10.15	12.69
8	1	1.75	2.74	3.64	5.48	7.3	10.95	13.69
9	0.75	1.75	2.59	3.45	5.17	6.9	10.35	12.93

	quantity of pre-drilled stud holes				
	4"	6"	8"	12"	15"
0	2	2	2	4	4
1	2	2	2	3	3
2	2	2	2	4	4
3	2	2	2	4	4
4	3	3	3	3	4
5	2	2	2	4	5
6	2	2	2	4	4
7	2	2	2	4	4
8	2	2	2	4	4
9	2	2	2	4	4

PLAQUES

availibility	size	shape	quantity of pre-drilled stud holes		character height	average visibility distance	
STANDARD SIZE	**5"**	**circle** (diameter)	**5" round**	4	2"	20'-35'	varies by finish/install location
STANDARD SIZE	**7"**	**circle** (diameter)	**7" round**	4	3"	20'-35'	varies by finish/install location
STANDARD SIZE	**10"**	**circle** (diameter)	**10" round**	4	2"-4"	30'-50'	varies by finish/character count
STANDARD SIZE	**8"x8"**	**square**	**8"x8" square**	4	3"-4"	20'-50'	varies by finish/character count
CUSTOM SIZE	5"x5"	square	5"x5" square	4		20'	varies by finish/install location
CUSTOM SIZE	6"x6"	square	6"x6" square	4		20'	varies by finish/install location
CUSTOM SIZE	3"x5"	rectangle	3"x5" rectanlgle	4		15'	varies by finish/install location
STANDARD SIZE	**3"x8"**	**rectangle**	**3"x8" rectangle**	4	2"	20'-35'	varies by finish/install location
CUSTOM SIZE	4x6"	rectangle	4"x6" rectangle	4		15'	varies by finish/install location
STANDARD SIZE	**4x11"**	**rectangle**	**4"x11" rectangle**	4	2.5"	20'-35'	varies by finish/install location
STANDARD SIZE	**5"x16"**	**rectangle**	**5"x16" rectangle**	6	3.5	25'-50'	varies by finish/install location
CUSTOM SIZE	6"x18"	rectangle	6"x18" rectangle	6		25'-50'	varies by finish/install location
CUSTOM SIZE	8"x15"	rectangle	8"x15" rectangle	6		25'-50'	varies by finish/install location

PLAQUES : AVERAGE VIEWING DISTANCES

Plaques are best viewed at close range. Recommended installation location for plaques is near building or landscape lighting for increased visibility. Dark powder coated finishes may have reduced legibility. Plaque legibility varies by font, character count, and installation location and surface.

.

	size	avg. text size *varies by character count	shape	aluminum, white and matte brass avg. viewing distance *varies by character count	matte black and dark bronze avg. viewing distance *varies by character count
petite plaques legible at 35' or less best at close range	5" round	2"-3"*	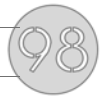	35'	20'
	3" x 8" rectangle	2"		35'	20'
small plaques legible at 35' or less best at close range	7" round	2"-3"*		35'	20'
	4" x 11" rectangle	2"-3"*		35'	20'
medium plaques legible at 50' or less	8" x 8" square	2"-4"*	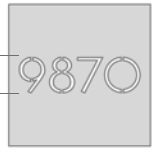	35 - 50"	20' - 30'
	10" round	2"-4"*	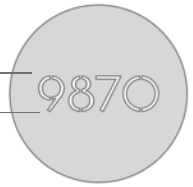	35' - 50'	20'- 30'
	5" x 16" rectangle	3"-4"*		35' - 50'	20' - 30'

NOT TO SCALE. FOR REFERENCE ONLY

NUMBERS AND LETTERS : AVERAGE VIEWING DISTANCES

Legibility varies by font, character count, and installation location and surface color. Choose a finish that creates high contrast against the instalation surface for maximum legibility.

.

	size / height in inches	example	avg. viewing distance *varies by finish
small	4”	9870	50’ or less
medium	6”	9870	100’ or less
	8”	9870	150’ or less
large	12”	9870	200” or less
	15”	9870	300’ or less

TYPICAL 4" ALUMINUM HOUSE NUMBER

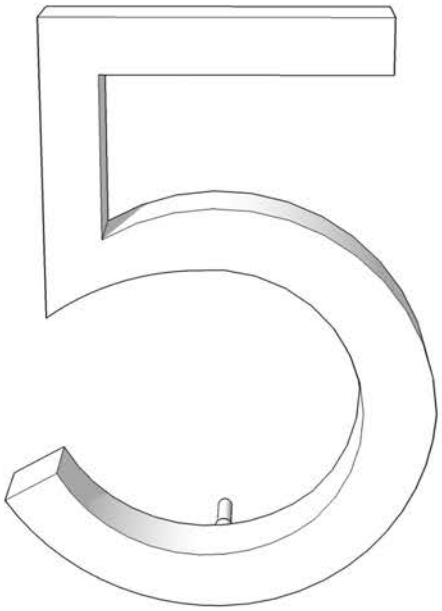

FRONT VIEW

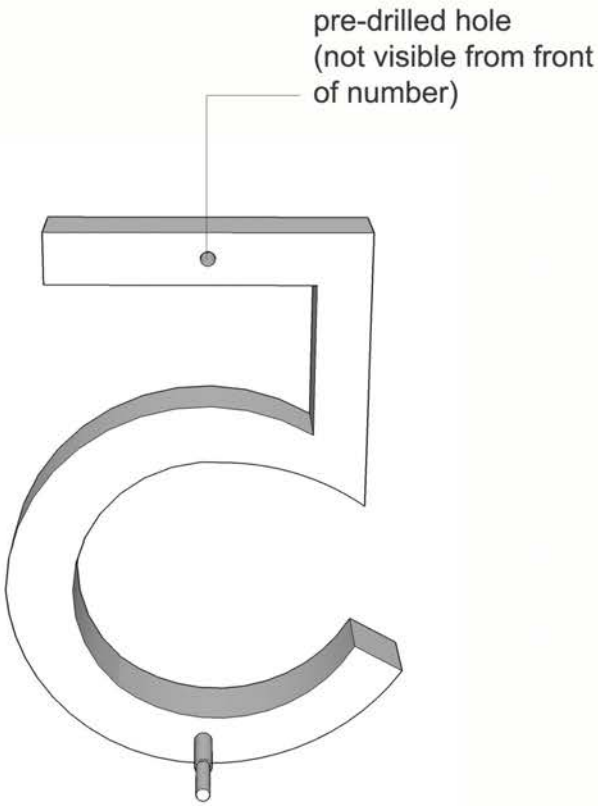

BACK VIEW

TYPICAL 4” ALUMINUM HOUSE NUMBER

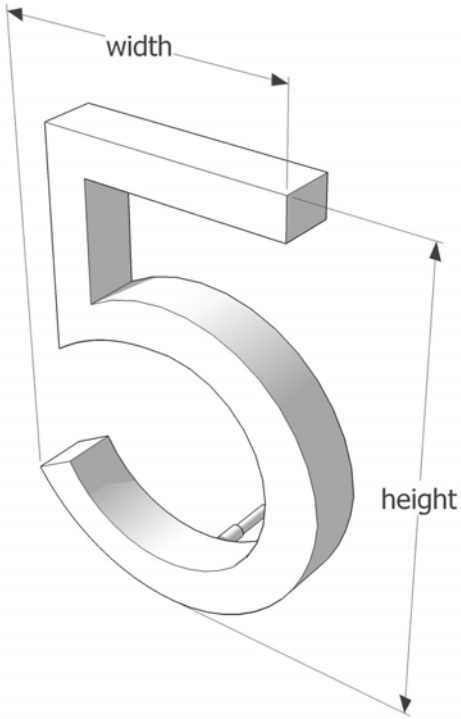

TOP VIEW

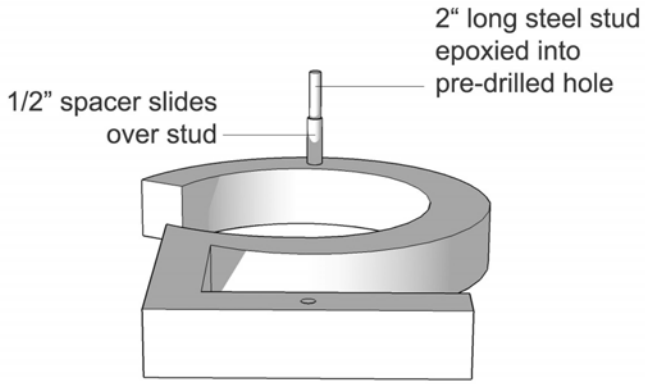

PERSPECTIVE VIEW

TYPICAL ALUMINUM PLAQUE - ROUND

FRONT VIEW

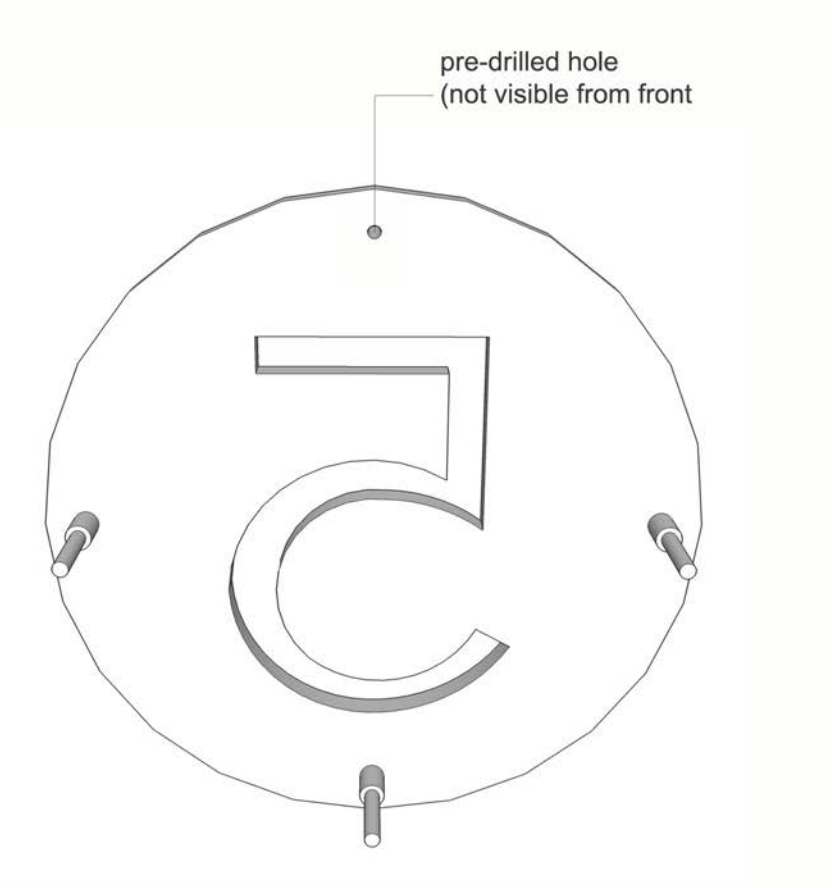

BACK VIEW

TYPICAL ALUMINUM PLAQUE - ROUND

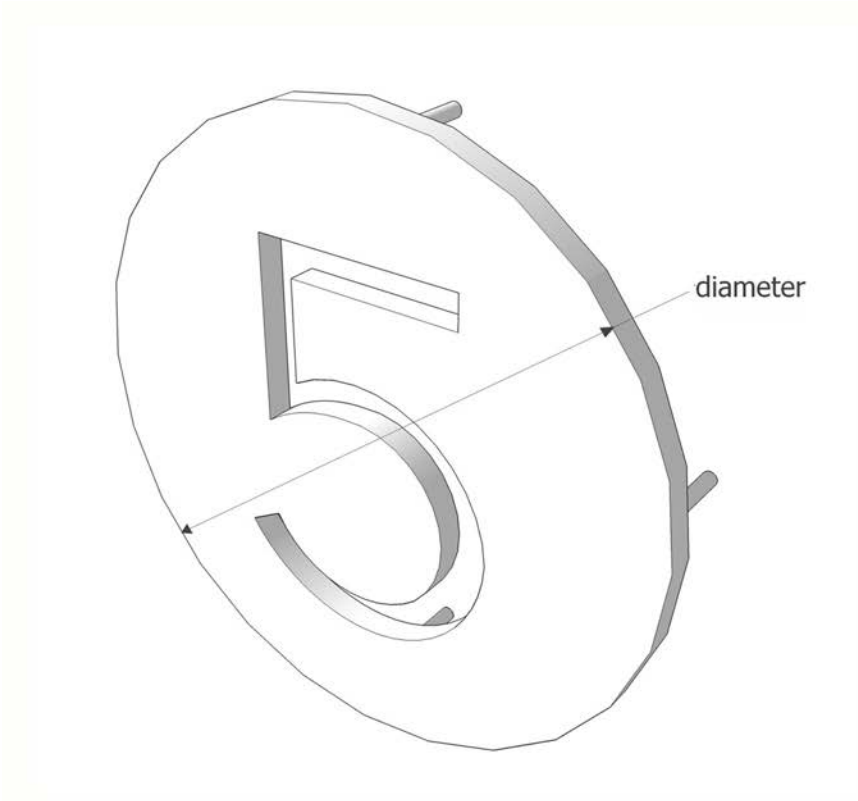

PERSPECTIVE VIEW

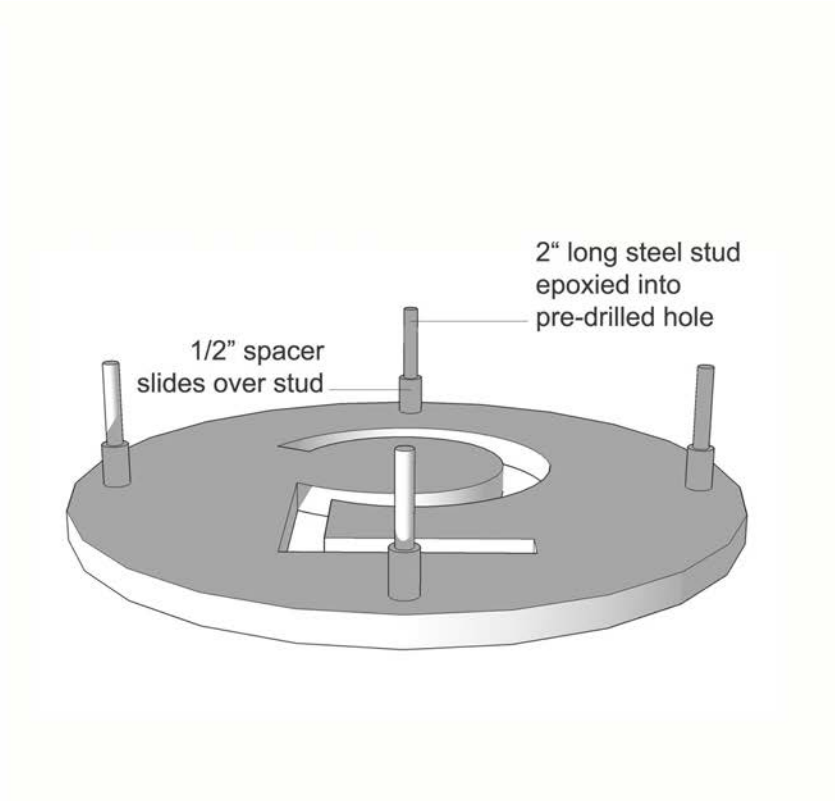

TOP VIEW - BACK SIDE

PALM SPRINGS TYPEFACE

0123456789

ABCDEFGHIJKLMNOPQRSTUVWXYZ

abcdefghijklmnopqrstuvwxyz

0123456789 example of plaque stenciling

SOCAL TYPEFACE

0123456789

ABCDEFGHIJKLMNOPQRSTUVWXYZ

no lowercase alphabet in this typeface

0123456789 example of plaque stenciling

AUSTIN TYPEFACE

0123456789

ABCDEFGHIJKLMNOPQRSTUVWXYZ

abcdefghijklmnopqrstuvwxyz

0123456789 example of plaque stenciling

SOHO TYPEFACE

0123456789

ABCDEFGHIJKLMNOPQRSTUVWXYZ

abcdefghijklmnopqrstuvwxyz

SOUTH BEACH TYPEFACE

0123456789

ABCDEFGHIJKLMNOPQRSTUVWXYZ

abcdefghijklmnopqrstuvwxyz

SANTA BARBARA TYPEFACE

0123456789

ABCDEFGHIJKLMNOPQRSTUVWXYZ

abcdefghijklmnopqrstuvwxyz

BACKBAY TYPFACE

0123456789

ABCDEFGHIJKLMNOPQRSTUVWXYZ

abcdefghijklmnopqrstuvwxyz

EXAMPLES OF CUSTOM HOUSE NUMBERS, LETTERS AND SYMBOLS AND PLAQUES

HOUSE NUMBERS WITH CUSTOM SYMBOL

'1/2 'symbol in SoCal typeface.

HOUSE NUMBERS IN CUSTOM TYPEFACE

Aluminum house numbers in custom font. Any custom font can be finished in white, black or dark bronze powder coat.

CUSTOM INTERIOR SIGNAGE

Custom plaque with corporate logo using custom font. Plaque shapes and fonts can be fully customized to your specifications.

CONNECTED HOUSE NUMBERS

Connected/continuous aluminum house numbers in Palm Springs typeface. Connected numbers can be done vertically or horizontally.

CUSTOM ADDRESS PLAQUE WITH CORPORATE LOGO

Square plaque with custom corporate logo and numbers in SoCal typeface.

ADDRESS PLAQUE WITH CUSTOM SYMBOLS

Rectangular plaque with custom arrow and '1/2 'symbols in Palm Springs typeface.

CUSTOM LOGO PLAQUE

Round plaque with customer corporate graphic. All plaques can be finished in white, black or dark bronze powder coat.

CUSTOM PLAQUE WITH CUSTOM CUTOUTS

Square doorbell plaque with custom holes and Palm Springs typeface.

INSTALLATION TIPS: ALUMINUM AND POWDER COATED HOUSE NUMBERS, LETTERS AND SYMBOLS AND PLAQUES

STEP 1
Gather supplies - house numbers, stencil, studs, spacers, (tape, adhesive, hammer, rubber mallet, drill and drill bit - not provided).

STEP 2
Tape stencil at desired location, use level to align template. Drill holes according to template - use 11/64” drill bit (3/16” for masonry or rock).

STEP 3
Apply epoxy to one end of the stud.

STEP 4
Push stud into pre-drilled hole on the back of the number. Light tapping with a hammer may be required. Place on soft surface and take care not to scratch the face of the number.

STEP 5
Slide spacer over stud and apply epoxy to the end of the exposed stud.

STEP 6
Push number into holes, light tapping with a rubber mallet may be required.

INSTALLATION TIPS: MAILBOX NUMBERS

STEP 1
Gather supplies - mailbox numbers, (tape, and ruler - not provided).

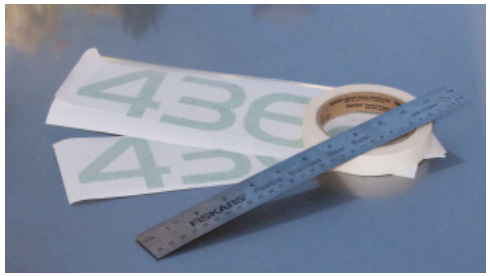

STEP 3
Peel off the number backing and align with tape, press numbers firmly onto mailbox.

STEP 2
Clean off the mailbox surface, measure the desired number location, and place a piece of tape to align the bottom of the numbers.

STEP 4
Remove the front transfer film and tape.

INSTALLATION TIPS: CURB NUMBERS

STEP 1
Gather supplies - curb stencil (spray paint, paper roll, and masking tape - not provided).

STEP 3
Paint stencil (be careful not to overspray).

STEP 2
Clean concrete surface of loose debris and press stencil firmly onto concrete at desired location. Remove front transfer film and tape edges.

STEP 4
Allow paint to dry and remove stencil.

LEED ™ FACT SHEET: ALUMINUM

The Aluminum Association

LEED™ Fact Sheet
Aluminum Sheet & Plate
for the Building & Construction Market

(LEED™ is Leadership in Energy & Environmental Design. The LEED Green Building Rating System™, as promulgated by the U.S. Green Building Council, aims to improve occupant well-being, environmental performance and economic returns of buildings using established and innovative practices, standards and technologies.)

RECYCLED CONTENT
A survey of aluminum producers in mid-2008 indicated that the total recycled content of domestically produced, flat rolled products for the Building and Construction market was approximately 85%. The survey of the producers also indicated that on average ~60% of the total product content is from post-consumer sources. While these numbers represent the industry average, higher post-consumer and total recycled content material may be available from individual producers. For information on the LEED™ program and to find out how you can earn credit for the recycled content of your aluminum products go to: http://www.usgbc.org/leed/leed_main.asp.

RECYCLABILITY
Not only does the aluminum used in the building and construction industry contain a high percentage of both post-consumer and post-industrial recycled content, at the end of its long, useful life in your building application it is 100% recyclable. Aluminum building components can be repeatedly recycled back into similar products with no loss of quality, and aluminum in its various forms provides the most valuable component for most municipal recycling efforts.

To produce aluminum from recycled material requires only ~5% of the energy required to produce aluminum from bauxite ore, and every ton of recycled aluminum saves 4 tons of bauxite. Additionally, using recycled aluminum instead of raw materials reduces air pollution generation such as CO2, SOx, and NOx by 95% and water pollution by 97%.

For additional information on aluminum products for the building and construction industry, please contact your local supplier.