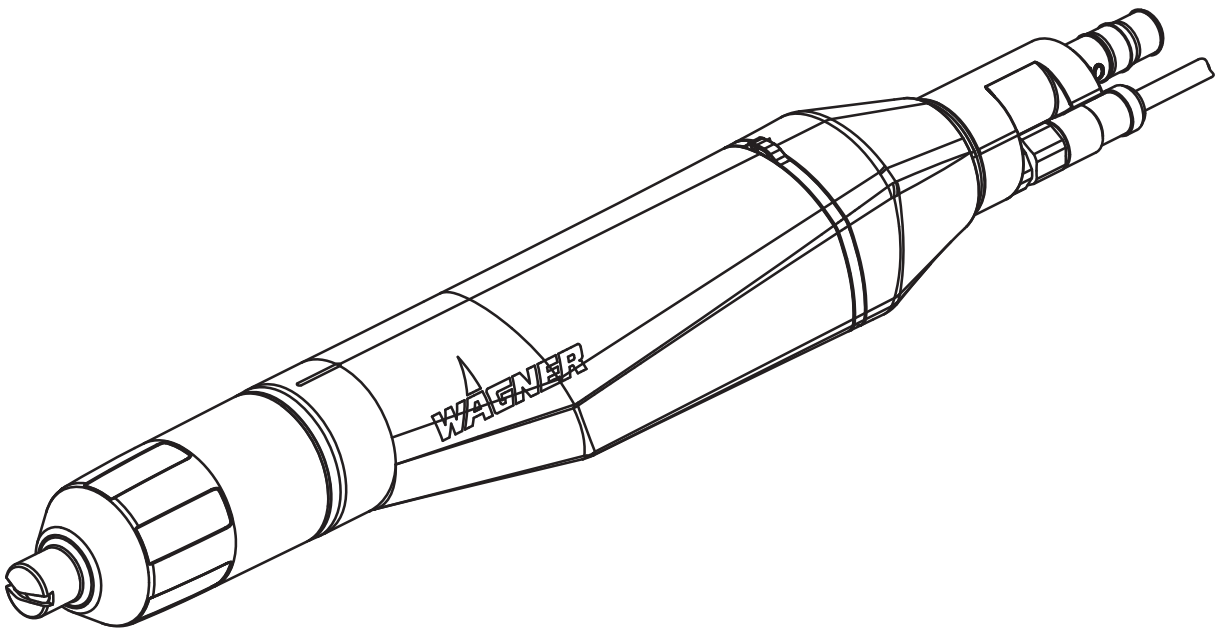

P_04915

Automatic powder gun

PEA-X1

Translation of the Original Operating Manual

CE 0102 Ex II 2 D 2 mJ

For professional use.
Always observe the information in this manual, particularly the safety instructions and the warning instructions. Store the manual in a safe place.

Edition: 10/2022

TABLE OF CONTENTS

1 ABOUT THESE INSTRUCTIONS

1.1 PREFACE

The operating manual contains information about safely operating, maintaining, cleaning and repairing the device. The operating manual is part of the device and must be available to the operating and service personnel.

The device may only be operated by trained personnel and in compliance with this operating manual. Operating and service personnel should be instructed according to the safety instructions.

This equipment can be dangerous if it is not operated according to the instructions in this operating manual.

1.2 WARNINGS, NOTICES AND SYMBOLS IN THESE INSTRUCTIONS

Warning instructions in this manual highlight particular dangers to users and to the device and state measures for avoiding the hazard.

These warning instructions fall into the following categories:

⚠	**DANGER**	Immediate risk of danger. Non-observance will result in death or serious injury.
⚠	**WARNING**	Potential danger. Non-observance may result in death or serious injury.
⚠	**CAUTION**	Potentially dangerous situation. Non-observance may result in minor injury.
ⓘ	**NOTICE**	Potentially dangerous situation. Non-observance may result in damage to property.
ℹ	**Info**	Provides information about particular characteristics and how to proceed.

Explanation of warning notice:

⚠ **WARNING**

This notice warns you of a danger!

Possible consequences of not observing the warning notice.

- The measures for preventing the hazard and its consequences.

1.3 LANGUAGES

The operating manual is available in the following languages:

Original operating manual

Language	Order no.
German	2428661

Translation of the original operating manual

Language	Order no.	Language	Order no.
English	2428662	Spanish	2428665
French	2428663	Chinese	2428667
Italian	2428664		

Additional languages upon request or at: www.wagner-group.com

1.4 ABBREVIATIONS

Order no.	Order number
ET	Spare part
K	Marking in the spare parts lists
Pos	Position
Stk	Number of pieces
--	Item not available as spare part
/	Item does not exist

1.5 TERMINOLOGY FOR THE PURPOSE OF THIS MANUAL

Cleaning

Cleaning	Manual cleaning of devices and device parts with cleaning agent.
Flushing	Internal flushing of paint-wetted parts with compressed air.

Personnel qualifications

Trained person	Is instructed in the tasks assigned to him/her, the potential risks associated with improper behavior as well as the necessary protective devices and measures.
Electrically trained person	Is instructed by an electrician about the tasks assigned to him/her, the potential risks associated with improper behavior as well as the necessary protective devices and measures.
Electrician	Can assess the work assigned to him/her and detect possible hazards based on his/her technical training, knowledge and experience in relevant provisions.
Skilled person in the context of DGUV 209-052	A person who, based on his/her technical training, experience and recent vocational experience, has sufficient technical knowledge in the area of electrostatic coating and is familiar with the relevant and generally accepted rules of technology so that he/she can inspect and assess the status of devices and coating systems based on workplace safety. Additional requirements for skilled persons can also be found in TRBS 1203 (2010/amendment 2012): Expert knowledge in the areas of protection against excessive pressure, electrical hazards and explosion protection (where applicable).

2 USING IN ACCORDANCE WITH THE INSTRUCTIONS

2.1 DEVICE TYPE

Automatic powder gun for coating grounded work pieces.

2.2 TYPE OF USE

The automatic powder gun is designed for the electrostatic coating of work pieces with organic powders.
WAGNER explicitly prohibits any other use!

The automatic powder gun may only be operated in a temperature range from 5–40 °C; 41–104 °F.

Electrostatic coating systems may only be used in spray areas equipped in accordance with EN 16985 or under equivalent ventilation conditions.

The device may only be operated under the following conditions:

- Use the device only to work with the materials recommended by WAGNER.
- Do not deactivate safety fixtures.
- Use only WAGNER original spare parts and accessories.
- The operating personnel must be trained on the basis of this operating manual.
- Follow the instructions in the operating manual.

2.3 FOR USE IN POTENTIALLY EXPLOSIVE AREAS

This type A-P electrostatic powder spray gun is suitable for processing industrial powder lacquers for coating electrically conductive objects and can be used in potentially explosive areas (zone 22). (see chapter Identification [▸▸ 9]).

In explosion hazard areas, only use approved explosion-proof electrical devices.

2.4 PROCESSIBLE WORKING MATERIALS

- Types of powder which can be charged electrostatically
- Metallic powder

Info

Contact your local WAGNER dealer and the lacquer manufacturer if you encounter application problems.

2.5 MISUSE

Misuse can lead to physical injury and/or property damage! Special attention must be paid that:

- No liquid coating products, e.g. solvents or water-based lacquers, are processed.
- No food, medicine or cosmetics are processed.

3 IDENTIFICATION

3.1 EXPLOSION PROTECTION IDENTIFICATION

As defined in Directive 2014/34/EU (ATEX), the device is suitable for use in potentially explosive areas.

Device Type	PEA-X1 automatic gun
Manufacturer	Wagner International AG 9450 Altstätten Switzerland

CE 0102 Ex II 2 D 2 mJ

CE	European Communities
0102	Notified body: PTB
Ex	Symbol for explosion protection
II	Device class II
2	Category 2
D	Ex-atmosphere dust
2 mJ	Maximum ignition energy 2 mJ

3.2 TYPE PLATE

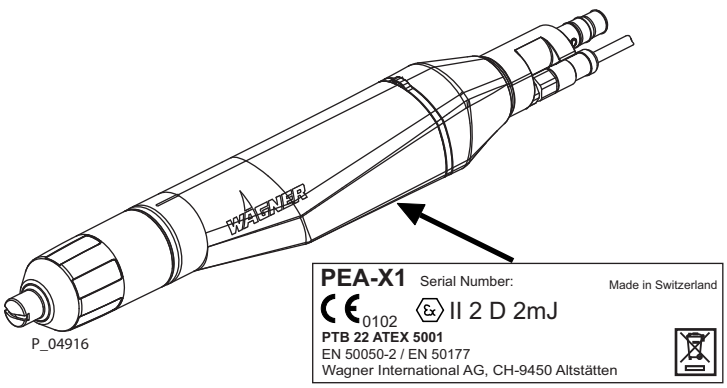

3.3 PERMISSIBLE DEVICE COMBINATIONS

⚠ WARNING

Incorrect use!

Risk of injury and damage to the device.

- Only connect the powder spray gun to original WAGNER devices.

Automatic powder gun PEA-X1 may only be used with the following control units:

Guns	Control units
PEA-X1 (with accessories)	EPG-Sprint X
	EPG-Sprint XE
	EPG-Sprint
	EPG S2
	HVM-DP

Guns	Control units
	EPG-DP5
	EPG-SL5

For accessories, see chapter Accessories [▸▸ 54]

4 BASIC SAFETY INSTRUCTIONS

4.1 SAFETY INSTRUCTIONS FOR THE OPERATOR

- Keep this operating manual at hand near the device at all times.
- Always follow existing regulations concerning occupational safety and accident prevention regulations.

4.1.1 Electrical Devices and Equipment

Danger of electric shock!

Danger to life from electric shock:

- Place and operate device in accordance with the existing safety requirements with regard to the operating mode and ambient influences.
- May only be maintained by skilled electricians or under their supervision. With open housings, the mains voltage poses a danger.
- Operate device in accordance with the safety regulations and electrotechnical regulations.
- Do not disconnect any plug connections during operation.
- Label plug connections with the warning "Do not disconnect when energized".
- Must be repaired immediately in the event of problems.
- Decommission if device poses a danger or is damaged.
- Must be de-energized before work is commenced.
  - Secure the device against being switched back on without authorization.
  - Inform personnel about planned work.
  - Observe electrical safety regulations.
- Ground all devices to a common grounding point.
- Only operate the device with a properly installed socket with a protective ground wire connection.
- Keep liquids away from electrical devices.

4.1.2 A Safe Work Environment

Danger due to dust formation!

Severe or fatal injuries due to explosion danger or inhalation, swallowing or contact with the skin or eyes.

- The floor of the work area must be electrostatically conductive (measurement in accordance with EN 1081:2018+A1:2020 or EN 61340-4-1:2004+A1:2015).
- In the spray booth, coating may only be performed with correctly designed and locked technical ventilation.
- Make sure that grounding and potential equalization of all system parts is reliably and permanently in effect and that they withstand the loads to be expected (e.g. mechanical, corrosion).
- Make sure that the personal protective equipment (see chapter Personal Protective Equipment [▸▸ 12]) is present and being used.
- Make sure that all people within the work area wear static dissipative shoes. The footwear must correspond to EN 20344. The measured insulation resistance must not exceed 100 MΩ.

- Protective clothing including gloves, must correspond to EN 1149-5. The measured insulation resistance must not exceed 100 MΩ.
- Ensure that there are no ignition sources such as naked flames, sparks, glowing wires, or hot surfaces in the spray booth. Do not smoke.
- A suitable system for suppressing fire and explosion must be installed.
- The powder release must be electrically interlocked with the connected technical ventilation of the spray system.
- Excess coating product (overspray) must be collected up safely.
  Accumulations of powder in the spray booth is to be avoided. Set the parameters of the floor cleaning and manually clean the spray booth as needed.
- Ensure that maintenance and safety checks are performed regularly.
- In case of defects, immediately shut down the device or system and repair before switching back on.
  Accumulations of powder are to be removed before switching the system back on.
- The operator/responsible person must ensure that an average concentration of powder lacquer in the air of 50% of the lower explosion limit (max. permitted powder/air concentration) is not exceeded. If there is no reliable lower explosion limit value, the average concentration of 20 g/m^3 must not be exceeded.

4.1.3 Personnel Qualifications

Danger due to incorrect use of device!

Risk of death due to untrained personnel.

- Ensure that the operating personnel has been instructed by the operator in accordance with the operating manual and the operating instructions. The device must only be operated, maintained and repaired by trained personnel. Refer to the operating instructions for information about the required personnel qualifications.

4.2 SAFETY INSTRUCTIONS FOR THE PERSONNEL

- Always observe the information in this manual, particularly the safety instructions and the warning instructions.
- Always follow existing regulations concerning occupational safety and accident prevention regulations.

Danger due to high-voltage field!

Danger to life from malfunction of active implants.

- Persons belonging to a risk group according to EMF guideline 2013/35/EU (e.g., carriers of active implants), must not enter the high-voltage area.

4.2.1 Personal Safety Equipment

Danger due to dust formation!

Serious or fatal injuries due to inhalation, swallowing or contact with the skin or eyes.

- Observe the processing regulations laid down by the manufacturer of the powder lacquer being used, when preparing or processing the powder.
- Take note of the manufacturer's notification and the relevant environmental protection regulations when disposing of powder lacquers.
- Take the specified protective measures, in particular wear safety goggles, protective clothing and gloves, as well as skin protection cream if necessary.
- Use a mask or breathing apparatus if necessary.

- For sufficient health and environmental protection, only operate the device with technical ventilation (extraction) switched on.

4.2.2 Safe Handling of WAGNER Powder Spray Devices

Danger due to dust formation!

- Do not point spray guns at people.
- Do not spray device parts using electrostatic equipment.
- Before any work on the device, in the event of work interruptions and malfunctions:
  - Switch off the energy/compressed air supply.
  - Relieve pressure on spray gun and device.
  - Secure the spray gun against actuation.
  - Disconnect the control unit from the mains.
  - In the event of functional faults, remedy the fault as described in the chapter on troubleshooting.
- Carry out the work steps in accordance with the chapter on pressure relief in the operating manual of the corresponding device:
  - If a prompt for pressure relief is given.
  - If coating work is interrupted or stopped.
  - Before the device is externally cleaned, checked or serviced.
  - Before the spray nozzle is installed or cleaned.

4.2.3 Grounding the Device

Danger due to electrostatic charge!

Explosion hazard and damage to the device.

The electrostatic charge may, in certain cases, give rise to electrostatic charges on the device. Flames or sparks can form during discharge.

Correct grounding of the entire coating system prevents electrostatic charges:

- Ensure that all devices and tanks are grounded before each coating process.
- All conductive components of the system, such as floors, walls, ceilings, barriers, transport equipment, work pieces, powder tanks, moving devices or structural parts in the spray area, with the exception of parts under high voltage during operation, must be connected to the grounding system.
  Parts of the spray booth must be grounded.
- Ensure that all persons inside the working area are grounded, e.g., that they are wearing static dissipative shoes.
- Grounding cables must be checked regularly to ensure that they are serviceable (see EN 60204).

4.2.4 Product Hoses

Danger due to damaged product hoses!

The product hose may cause dangerous injuries.

- Use only an original WAGNER powder hose.
- Make sure that the hoses are laid only in suitable places. Hoses should not be laid in the following places under any circumstances:
  - in high traffic areas

- on sharp edges
- on moving parts
- on hot surfaces

- Ensure that the hoses are never run over by vehicles (e.g., fork lifts), or that the hoses are never put under pressure from the outside in any other way.
- Ensure that the hoses are never kinked. Observe maximum bending radii.
- Ensure that no work is ever performed with a damaged hose.
- Make sure that the hoses are never used to pull or move the device.

4.2.5 Electrical Connection Cables

Risk caused by improperly laid cables!

Risk of injury and damage to the device.

- Properly lay connection cables and check them regularly.
- Immediately replace damaged connection cables.
- Ensure that no work is ever performed with a damaged connection cable.
- Do not lay connection lines on travel paths of forklifts or through doors/gates.
- Do not lay connection lines in the area of walkable hallways or paths to avoid the risk of tripping.

4.2.6 Cleaning and Flushing

Danger due to cleaning and flushing!

Explosion hazard and damage to the device.

- Before starting cleaning or any other manual work, the high voltage in the spray area must be shut down and locked to prevent it from being switched back on.
- Lock the compressed air supply and decompress the device.
- Secure the device against being switched back on without authorization.
- Use only electrically conducting and grounded tanks for cleaning fluids.
- Preference should be given to non-ignitable cleaning fluids.
- Ignitable cleaning liquids may only be used if all high-voltage parts are discharged to a discharge energy of less than 0.24 mJ after shutting off the high voltage before these parts can be reached. Most ignitable solvents have an ignition power in the range of 0.24 mJ, corresponding to 60 nC.
- The flash point of the cleaning agents must be at least 15 K over the ambient temperature.
- Note the details provided by the powder lacquer manufacturer.
- To correct for dust deposits, only mobile industrial vacuums of type 1 may be used (see EN 60335-2).
- Take measures for workplace safety (see Chapter "A Safe Work Environment").

4.2.7 Maintenance and Repair

Danger due to improper maintenance and repair!

Danger to life and equipment damage.

- Only a WAGNER service center or a specially trained person may carry out repairs and replace parts.

- Repair or replacement of devices or parts of devices are only allowed to be performed outside the hazard area by qualified personnel.
- Use only WAGNER original spare parts and accessories.
- WAGNER assumes no liability for changes to the product made by the operating company without the knowledge of WAGNER. Any adjustments to the documentation and the market release are the responsibility of the operating company.
- Only repair and replace parts that are listed in the chapters "Accessories" and "Spare Parts" and that are assigned to the device.
- Do not use any defective components.
- Before all work on the device and in the event of work interruptions:
  - Switch off the energy and compressed air supply.
  - Relieve pressure on spray gun and device.
  - Secure the spray gun against actuation.
- Observe the operating and service manual for all work.

4.2.8 Protective and Monitoring Equipment

Danger due to removal of protective and monitoring equipment!

Danger to life and equipment damage.

- Protective and monitoring equipment must not be removed, modified or rendered unusable.
- Regularly check for perfect functioning.
- If defects are detected on protective and monitoring equipment, the system must not be operated until these defects are remedied.

To prevent electrostatic flashover, the union nut for securing the nozzles is designed in a certain geometric shape. This shape, together with the shape of the flat jet nozzle or deflector cone sleeve, prevents the nozzles from coming loose unintentionally (see chapter Accessories [▸▸ 54]).

To ensure safety, only use original WAGNER spare parts!

4.3 INFORMATION ABOUT SAFE DISCHARGES

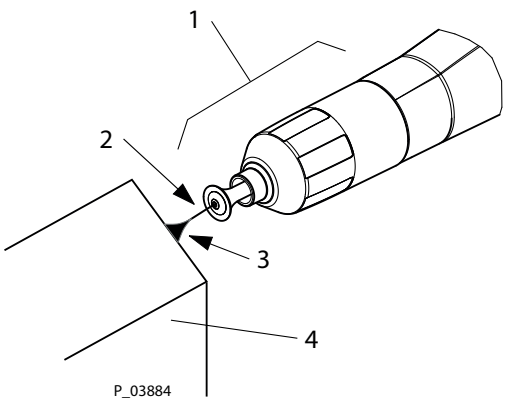

Pos	Designation
1	Nozzle
2	Electrode
3	Luminous discharge
4	Work piece

With the high voltage switched on, a luminous or corona discharge occurs at the electrode tip; this can only be seen in the dark. This physical effect can be seen when the electrode is brought near the grounded work piece. This luminous discharge does not involve any ignition energy and has no effect on system handling. When the electrode approaches the work piece, the control unit automatically reduces the high voltage to a safe value. If you touch plastic parts of the spray gun with your finger, harmless discharges may occur due to the high-voltage field around the spray gun (so-called brush discharges). However, these do not contain any ignition energy.

5 DESCRIPTION

5.1 CONSTRUCTION OF THE AUTOMATIC GUN

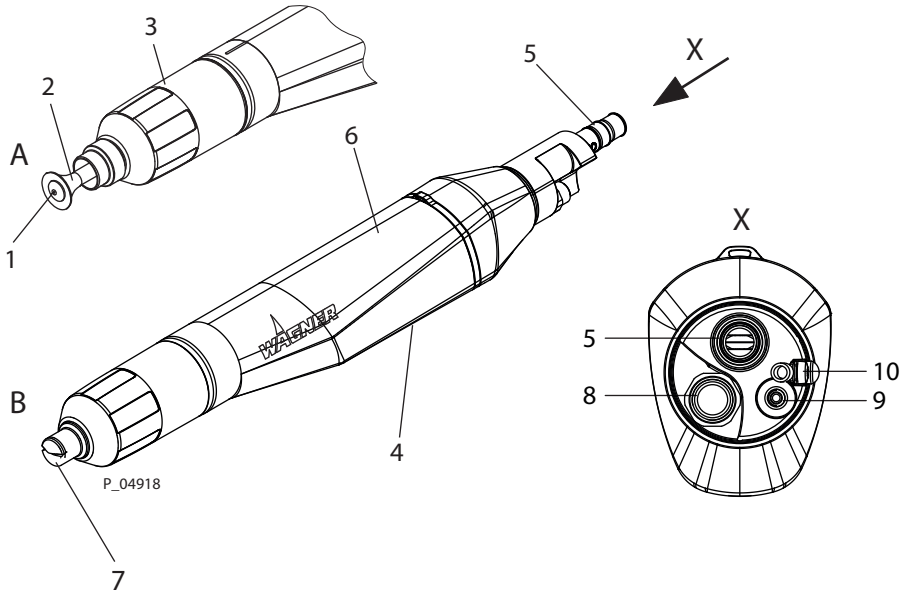

A	Round jet version	5	Powder hose connection
B	Flat jet version	6	Spray gun body
1	Electrode	7	Flat jet nozzle
2	Deflector cone	8	Electrical connection
3	Union nut	9	Atomizer air connection
4	Type Plate	10	Cable lug for the grounding connection

5.2 DIFFERENCES BETWEEN THE VARIANTS

NOTICE

Grounding

For the **PEA-X1 XL** variant, grounding must be provided by the grounding connection, as shown in view X!

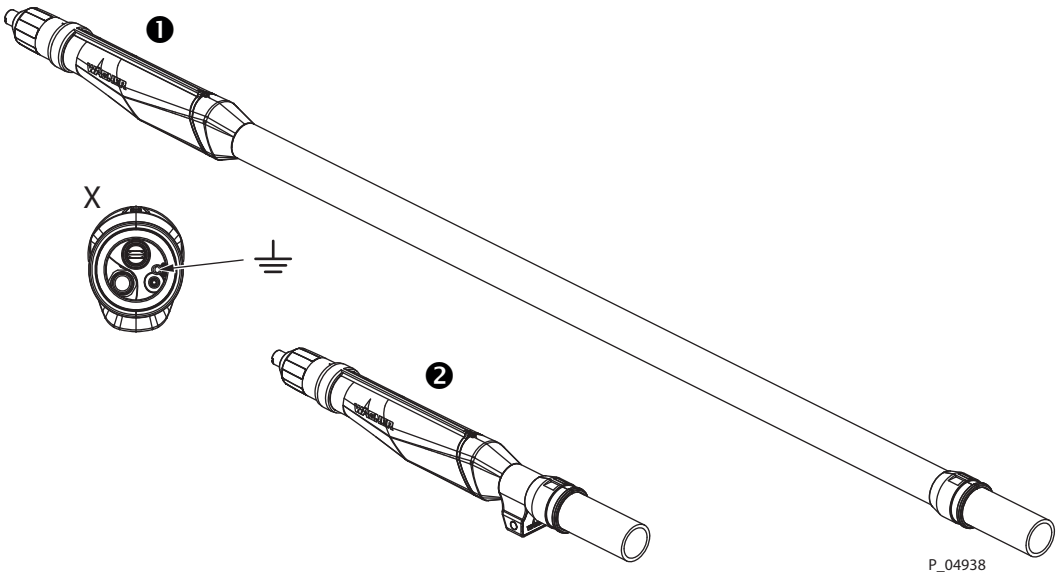

1	**PEA-X1 XL** (with extension duct)	2	**PEA-X1** (standard, with short bracket)
X	View from behind		

There are two distinct variants: **PEA-X1** and **PEA-X1 XL**.

The **PEA-X1** variant is equipped with a short bracket (order no. 2419801, see Chapter Gun Holder [▸▸ 54]), while the **PEA-X1 XL** variant has an extension tube (see Chapter Extension duct [▸▸ 61]).

5.3 NOZZLE SYSTEMS

Only nozzle systems listed in chapter Accessories [▸▸ 54] may be used and they must not be interchanged!

5.4 VERSION D8

Version D8 comprises a powder tube, an electrode holder and a nozzle with a small diameter. For this, Wagner offers a corresponding conversion set (order no. 2429198).

When should this version be used?

If the total air volume is too low with version D10 (standard version), this can lead to powder deposits in the powder tube. The reduction in the cross-section, caused by powder deposits, can lead to a poor coating result, as a sizable amount of powder could be ejected onto the work piece. Therefore, version D8 should be used in such an application case. At the same time, the powder tube must, of course, also be adapted accordingly. Here, only powder tube D8 or D9 can be used.

Version D8 is recommended for a max. total air of 3.5m^3/h or less (dependent on material/powder). This should be individually assessed, depending on the application or powder used.

Note:

As the maximum powder discharge through version D8 is lower and the pressure is higher, this version is not recommended for discharge quantities greater than 200 grams/minute.

Recommended accessories

The electrode holder and the flat jet nozzle are already included in the X1 conversion set HC cpl.!

Accessories: see X1 HC (D8) Flat Jet Nozzles System [▸▸ 55].

5.5 POSITIVE CASCADE

The version with positive cascade can be used for special applications for powder in powder coating processes.

The `powder in powder´ coating process is a process in which the primer and the top coat are applied directly one after the another, without the primer being cured first. This makes it possible to save energy and shorten the processing time.

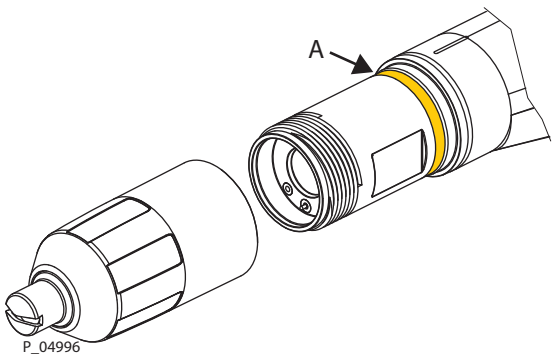

A	Identification: "Attention! Positive cascade"

Note:

For the conversion of an existing gun, the Wagner customer service must be contacted!

Instead, an additional PEA-X1 Basic (+) gun can be ordered (order no. 2430805, see also chapter Extent of Delivery [▸▸ 20]).

5.6 MODE OF OPERATION OF THE AUTOMATIC POWDER GUN

To switch the automatic powder gun on or off, use the superordinate control unit. At the same time the air supply and high voltage are activated.

The distance of the installed spray guns to each other must be at least 300 mm; 11.81 inches for functional reasons.

To lock the automatic powder gun, its control cabinet must be switched off! If changing from the flat jet nozzle to the deflector cone, the depth control must be adjusted.

5.7 EXTENT OF DELIVERY

Stk	Order no.	Designation
1	2430803	PEA-X1 Basic (F) automatic gun with flat jet nozzle, without mounting bracket
1	2430804	PEA-X1 Basic (R) automatic gun with round jet nozzle, without mounting bracket
1	2430805	PEA-X1 Basic (+) automatic gun with positive cascade and flat jet nozzle, without mounting bracket
1	2324205	Wedge tool
1	9982079	Atomizing air hose, 6 m
The standard equipment includes:		
1	2427643	Declaration of Conformity
1	2428661	Operating manual, in German
1	See chapter Languages [▸▸ 6]	Operating manual in local language

5.8 DATA

5.8.1 Technical Data

Dimensions:	
Length/width/height	See chapter Dimensions [▸▸ 21]
Weight	545 g; 1.2 lbs
Electrical:	
Input voltage	Maximum 22 Vpp
Input current	Maximum 0.9 A
Frequency	19–30 kHz
Output voltage	Maximum 100 kV DC
Maximum Corona current	120 µA
Polarity	Negative or positive (depending on variant)
Pneumatic:	
Input air pressure (atomizing air volume)	Maximum 3 bar; 0.3 MPa, 43.51 psi
Powder discharge quantity	Maximum 450 g/min; maximum 0.99 lbs/min

⚠ WARNING

Exhaust air containing oil!

Risk of poisoning if inhaled.

- Provide compressed air free from oil and water.

Ambient conditions:

If low-melting powders are used, the ambient temperature may have to be lower than 30 °C; 86 °F.

Volume measures for volumes specified in Nm^3 (standard cubic meters). One cubic meter of a gas at 0 °C and 1.013 bar is called norm cubic meter.

Ambient conditions:	
Operating temperature range	5–40 °C; 41–104 °F
Relative humidity	< 75 %

5.8.2 Dimensions

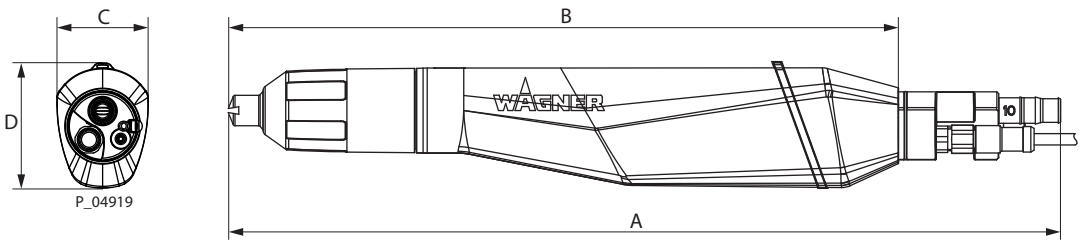

Measure-ment	mm	inch
A*	440/445	17.32/17.52
B	354	13.94
C	49	1.93
D	66.5	2.62

* With flat jet nozzle/deflector cone

5.9 ACCESSORIES

Only the accessories listed in Chapter Accessories [▸▸ 54] of this operating manual may be connected to the automatic powder gun PEA-X1.

6 ASSEMBLY AND COMMISSIONING

6.1 TRAINING OF ASSEMBLY/COMMISSIONING PERSONNEL

- The assembly and commissioning personnel must have the technical skills to safely commission the device.
- When assembling, commissioning and carrying out all work, read and follow the operating manuals and safety regulations for the additionally required system components.

A skilled person must check to ensure that the device is in a reliable state after it is assembled and commissioned.

6.2 STORAGE CONDITIONS

Until the point of assembly, the device must be stored in a dry location, free from vibrations and with a minimum of dust. The device must be stored in closed rooms.

The air temperature at the storage location must be between -20 °C and +60 °C (-4 °F and +140 °F).

The relative air humidity at the storage location must be between 10 and 95% (without condensation).

6.3 INSTALLATION CONDITIONS

The air temperature at the installation site must be in a range between 0 °C and 40 °C; 32 °F and 104 °F.

The relative air humidity at the installation site must be between 10 and 95% (without condensation).

6.4 PREPARATION OF THE SPRAY GUN

6.4.1 Selection of a Suitable Nozzle System

The process of changing from the flat jet nozzle to the deflector cone is described in Chapter Changing Nozzle Types [▸▸ 37].

You will find the article numbers of the different nozzles in chapter Accessories [▸▸ 54].

Nozzle	Application overview	Powder cloud
Flat jet nozzle  P_04985	Complex part geometries Flat work pieces (reduced picture frame) Profile Undercuts	Widely spread flat powder cloud
Deflector cone 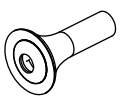 P_01665	Wire goods Grid designs Small components	Round powder cloud Size of the powder cloud is dependent on the deflector plate diameter

Nozzle	Application	Distance to Work piece (mm)	Powder discharge (g/min)
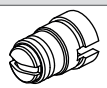 P_01664	Universal Deep and complex part geometries Parts with large surfaces	120 – 300	50 – 300

The spray width can be adjusted by the sliding ring.

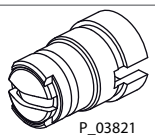 P_03821	Sliding ring at rear, wide cloud Cloud opening angle approx. 80°
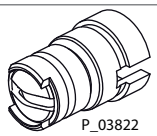 P_03822	Sliding ring at front, narrow cloud Cloud opening angle approx. 60°
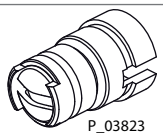 P_03823	Sliding ring at front, turned by 90°, extra narrow cloud Cloud opening angle approx. 40°
 P_04985	Standard flat jet nozzle with wide area of application
 P_04986	X1 flat jet nozzle HC1, for small total air volumes and low powder discharge.
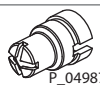 P_04987	X1 cross nozzle, 90°, for narrow, spot coating
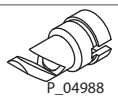 P_04988	Single powder spray deflection nozzle in 3 fixed angles (30°, 45° and 60°)
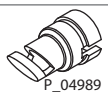 P_04989	
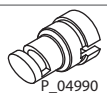 P_04990	

Deflector cone	Application	Distance to work piece (mm)
R18 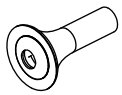 P_01665	⌀ 18 mm Smaller flat parts	100 – 300
R25 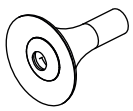 P_01666	⌀ 25 mm Medium sized flat parts	100 – 300
R34 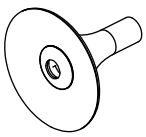 P_01667	⌀ 34 mm Large flat parts	100 – 300

6.5 CONNECTING THE AUTOMATIC POWDER GUN

Pos	Designation
1	Powder feed from feed system
2	Electrical connection of the control unit or high-voltage generator
3	Atomizing air
4	Cable lug for grounding

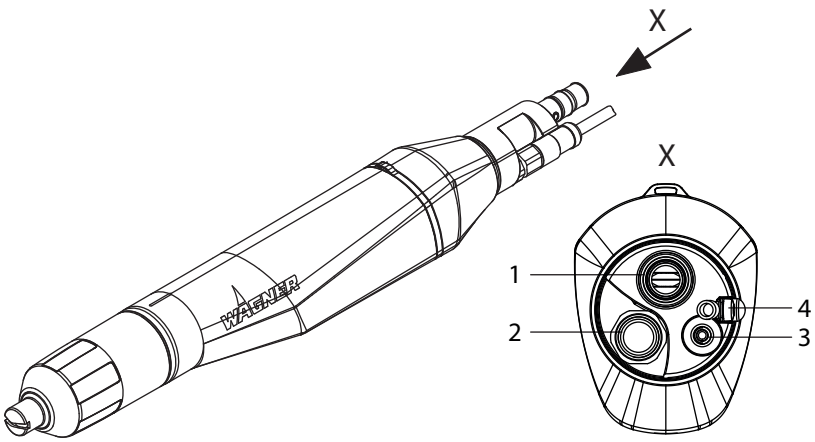

P_04920

1. Switch off the high-voltage generation on the control unit.
2. **PEA-X1 variant:** Mount gun bracket on the gun support of the reciprocator.
3. **PEA-X1 XL variant:** Mount extension tube on the gun support of the reciprocator.
4. Pull hoses and gun cable through the kink protection (if present) and through the holder or the extension tube.
5. Connect powder and atomizing air hose and spray gun cable.
6. **PEA-X1 variant:** Connect grounding strand if necessary. With an electrically conductive gun support, no separate grounding strand must be connected.

7. **PEA-X1 XL variant:** Connect the grounding cable to the cable lug for grounding (Pos. 4)!
8. Push the gun onto the holder or the extension tube until the pushbutton snaps into place.
   Note:
   To connect and fasten the spray gun, use the parts listed in chapter Accessories [▸▸ 54].
   For functional reasons, the distance between the mounted spray guns must be at least 300 mm; 11.81 inches!
9. Connect the electrical cable of the automatic powder gun to the control unit.
10. Connect the powder feed hose to the automatic powder gun and to the feed system.
11. Connect the atomizing air hose to the automatic powder gun and to the control unit.

For the differences between the variants, see Chapter Differences between the Variants [▸▸ 18]!

6.6 GROUNDING

For safety reasons, the control unit must be properly grounded. The grounding connection to the energy supply (socket) is made via the mains connection cable's protective conductor, while that to the work piece/system is made via the knurled screw on the rear of the control unit. Both connections are absolutely essential. The gun is grounded according to instructions for proper commissioning.

Good grounding of the work piece is also necessary for optimum powder coating.

A poorly grounded work piece causes:

- dangerous electric charging of the work piece
- very bad wrap-around
- uneven coating
- back spraying to the spray gun, i.e., contamination

Prerequisites for perfect grounding and coating of a work piece are:

- Clean suspension of the work piece to be coated.
- That a grounding resistance of the work piece of 1 MΩ is not exceeded (resistance to ground measured at 500 V or 1000 V).

Sparks between conveyor, conveyor hooks (hangers) and work piece can occur if electric contact points between conveyor, conveyor hooks (hangers) and work piece are not sufficiently cleaned and therefore the work pieces are not sufficiently grounded! These sparks can cause heavy radio frequency interference (EMC).

6.6.1 Grounding the powder coating system

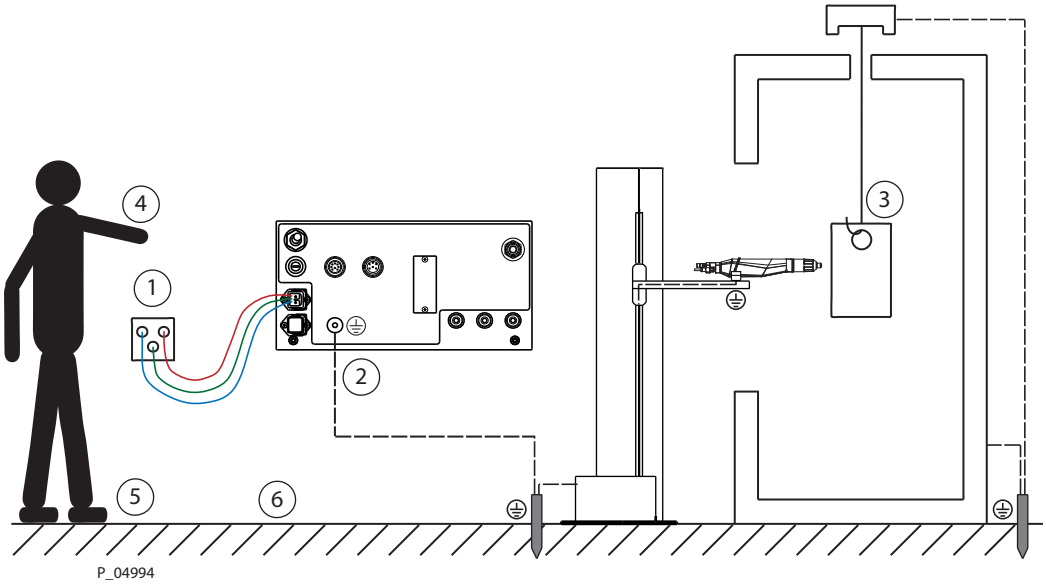

1. Only use mains cables with grounding strand!
2. Connect the control unit's grounding cable with the signal ground!
3. Remove all paint from hooks and other hanger parts!
4. Wear electrostatically conductive gloves!
5. Wear electrostatically conductive footwear!
6. The floor must be electrostatically conductive!

6.7 SAFETY CHECKS

A skilled person must check to ensure that the device is in a reliable state after it is assembled and commissioned. This includes:

- Carry out safety checks in accordance with Chapter Safety Checks [▸▸ 30].

7 OPERATION

7.1 TRAINING THE OPERATING PERSONNEL

- The operating personnel must be qualified to operate the entire system.
- The operating staff must be familiar with the potential risks associated with improper behavior as well as the necessary protective devices and measures.
- Before work commences, the operating personnel must receive appropriate system training.

7.2 TASKS

1. Ensure that:
   - regular safety checks are performed in accordance with Chapter Safety Checks [▸▸ 30]
   - commissioning is carried out in accordance with chapter Assembly and Commissioning [▸▸ 22].

7.3 SWITCHING ON THE AUTOMATIC POWDER GUN

To switch on the automatic powder gun, use the superordinate control unit of the system. At the same time, the high voltage and the coating material supply are activated.

7.4 OPTIMIZING THE POWDER CLOUD FOR COATING

1. Switch on high voltage generator and powder feed.
   Note:
   To minimize wear on the wearing parts, the total air volume should be below 5 Nm^3/h.
   The atomizing air should be set for the
   ⇨ flat jet nozzle to 0.1 Nm^3/h
   ⇨ round jet nozzle to > 0.2 Nm^3/h
2. Adjust the powder quantity and the powder speed on a test piece.

7.4.1 Recommended Settings for Total Air Volume

Hose length	Hose diameter		
	9 mm	**10 mm**	**11 mm**
8–12 m		3.0–3.5 m^3/h	3.5–4.0 m^3/h
12–16 m		3.5–4.0 m^3/h	4.0–4.5 m^3/h

7.5 SWITCHING OFF THE AUTOMATIC POWDER GUN

7.5.1 Switching Off in Normal Operation

The automatic gun is switched off differently depending on the type of powder conveyor. In most cases, this process is performed by the coating system controller.

Note:

For each interruption of work, the automatic gun should be blown through (flushed) and powder residue removed. This process can largely avoid powder deposits and a surge the next time the spray gun is switched on.

If the automatic gun should be switched off manually and the powder conveyor is not suitable for automatic flushing mode, please proceed as follows:

Work steps for an example with powder injector as powder conveyor:

1. The atomizing air has to remain open to prevent powder from penetrating into the atomizing air channels and the cascade compartment during the flushing process.
2. Switch off the powder feed and high voltage generation.
3. If the settings of the feed and dosing air should not be changed, in order to continue coating with the same powder cloud, remove the powder injector from the injector connection of the powder tank.
4. When the system is switched on again, no more powder will be delivered.
5. Switch the powder feed on again to blow out any powder remaining in the gun.
6. The powder feed can now be switched off.

7.5.2 Switching Off the Automatic Gun in the Event of Faults or Emergencies

In the event of faults or emergencies, use the emergency stop device to switch off the gun together with the system. The high voltage and coating material feed are switched off at the same time.

7.5.3 Pressure Relief / Work Interruption

- Carry out the work steps in accordance with the chapter on pressure relief in the operating manual of the corresponding device:
  - ⇨ If a prompt for pressure relief is given.
  - ⇨ If coating work is interrupted or stopped.
  - ⇨ Before the device is externally cleaned, checked or serviced.
  - ⇨ Before the spray nozzle is installed or cleaned.

7.6 REPRODUCIBLE SETTING OF THE NOZZLE POSITION

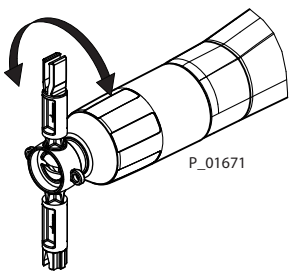

An adjustment tool is provided for the flat jet nozzle.

It permits turning the flat jet nozzle without damaging the electrodes and without removing the union nut.

The union nut only has to be slackened.

8 CLEANING AND MAINTENANCE

8.1 CLEANING

8.1.1 Cleaning Personnel

Cleaning work should be undertaken regularly and carefully by qualified and trained personnel. They should be informed of specific hazards during their training.

The following hazards may arise during cleaning work:

- health hazard from inhaling powder lacquer,
- use of unsuitable cleaning tools and aids.

8.1.2 Cleaning Procedures

The cleaning intervals should be adapted by the operator depending on the level of use and if necessary the level of soiling.

If in doubt, we recommend contacting WAGNER's specialist personnel.

8.1.3 Performing a Paint Change

⚠ WARNING

Dust formation!

Risk of poisoning if inhaled.

Danger due to escaping dust, contamination of the device and device components.

- Before starting cleaning or other manual work, the high voltage must be shut down and locked to prevent it from being switched back on!
- During every paint change, the extraction system of the booth and the filter cleaning system must remain switched on!

In the case of a paint change, powder residues must be thoroughly removed from all powder feeding parts. In the following, only the procedure for the powder spray gun is described.

Note:

During a paint change, the nozzle system does not necessarily have to disassembled. If the union nut is not screwed on tightly up to the stop position, this may cause the paint to smear.

Work steps:

1. Automatically flush the powder coating system, switch it off and secure it from being switched back on.
2. If no automatic flushing takes place, manually flush the automatic gun and remove any powder residue before the powder coating system is switched off.
   - ⇨ Disconnect the powder feed hose from the automatic gun.
   - ⇨ Blow through the automatic gun using an air gun and thus remove any powder residues.
   - ⇨ Switch off the powder coating system and secure it from being switched back on.
3. After cleaning all powder feeding parts, reconnect the powder feed hose to the automatic gun.
4. The automatic gun is ready for use again.

8.2 MAINTENANCE

8.2.1 Maintenance Personnel

Maintenance work should be undertaken regularly and carefully by qualified and trained personnel. They should be informed of specific hazards during their training.

The following hazards may arise during maintenance work:

- health hazard from inhaling powder lacquer,
- use of unsuitable tools and aids.

A skilled person must ensure that the device is checked for being in a reliable state after maintenance work is completed.

8.2.2 Maintenance Instructions

⚠ DANGER

Incorrect maintenance/repair!

Danger to life and equipment damage.

- Only a WAGNER service center or a specially trained person may carry out repairs and replace parts.
- Use only WAGNER original spare parts and accessories.
- Only repair and replace parts that are listed in the spare parts chapter and that are assigned to the device.
- Before all work on the device and in the event of work interruptions:
  - Switch off the energy and compressed air supply.
  - Relieve spray gun and device pressure.
  - Secure the spray gun against actuation.
- Observe the operating and service manuals of the individual components for all work.

Prior to maintenance

- Flush and clean the system according to Chapter Cleaning Procedures [▸▸ 29].

After maintenance

- Carry out safety checks in accordance with Chapter Safety Checks [▸▸ 30].
- Put the system into operation and check for leaks.
- Have the system checked for safe condition by a skilled person.

8.2.3 Safety Checks

8.2.3.1 Grounding Check

Every day

- Before starting work, carry out a visual check to ensure that the system is grounded.

8.2.4 Maintenance Procedures

The maintenance intervals should be adapted by the operator depending on the level of use and if necessary the level of soiling.

If in doubt, we recommend contacting WAGNER's specialist personnel.

Maintenance work	Time stamp	
	Per shift	Weekly
Blow out gun and check for sintering	x	
Check gun settings	x	
Blow out powder hoses	x	
Check grounding		x
Check compressed air quality		x
Check gun voltage		x
Check powder hoses for bends and sintering		x

8.3 REPLACING THE AUTOMATIC GUN

Before replacing the automatic powder gun, it must be cleaned thoroughly of any powder residue.

The wearing parts in the automatic powder gun, marked in the spare parts list with "♦", must be checked regularly and replaced as necessary.

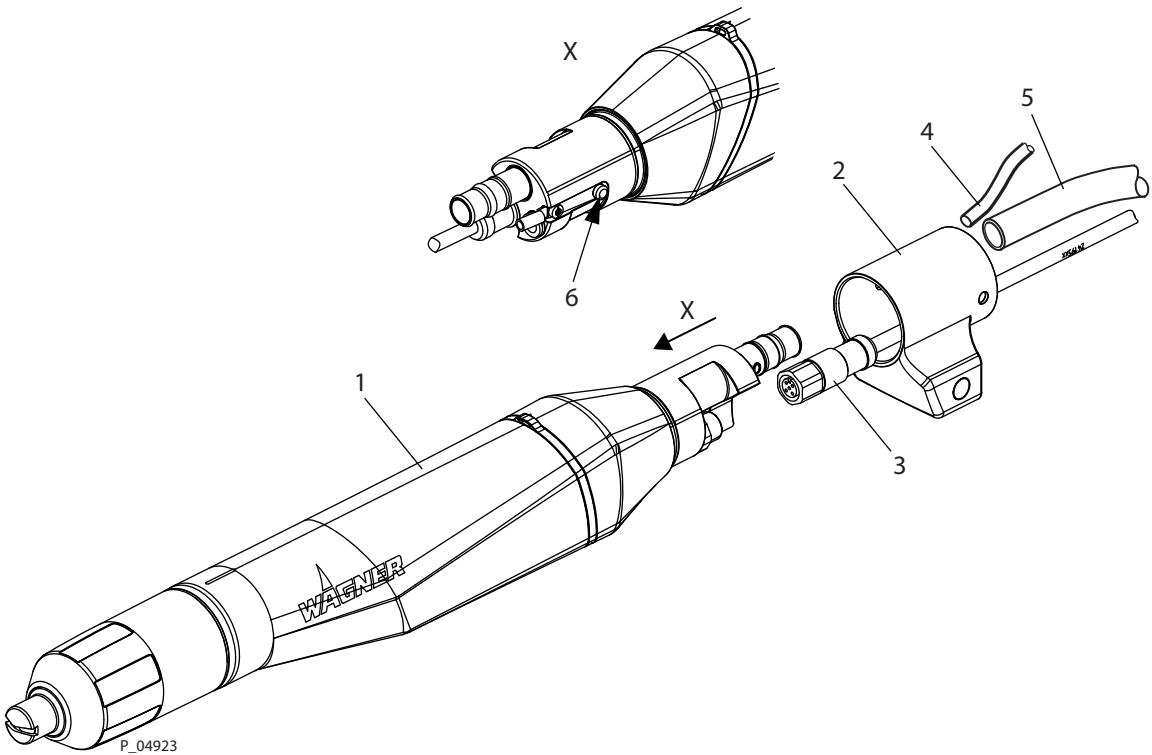

1. Switch off the powder coating system and/or the high voltage generation.
2. First pull the gun 1 off the holder 2 by pressing the pushbutton 6 and simultaneously sliding (hoses and gun cable should be slightly loosened in advance in the rear area). Disconnect the electrical cable 3 from the automatic gun 1.
3. Disconnect powder feed hose 5 and atomizing air hose 4 and, if present, the grounding cable from the automatic gun 1.
4. Connect the electrical cable 3 to the automatic gun 1 before inserting it into the mounting bracket 2.

5. Insert the new automatic gun 1 into mounting bracket 2. If mounted correctly, the pushbutton 6 snaps into the holder 2 or XL tube!
6. Connect powder feed hose 5 and atomizing air hose 4 and, if need be, the grounding cable to the automatic gun 1.
7. The automatic powder gun is ready for use again.

8.4 CHANGING THE FLAT JET NOZZLE

8.4.1 Removing the Flat Jet Nozzle

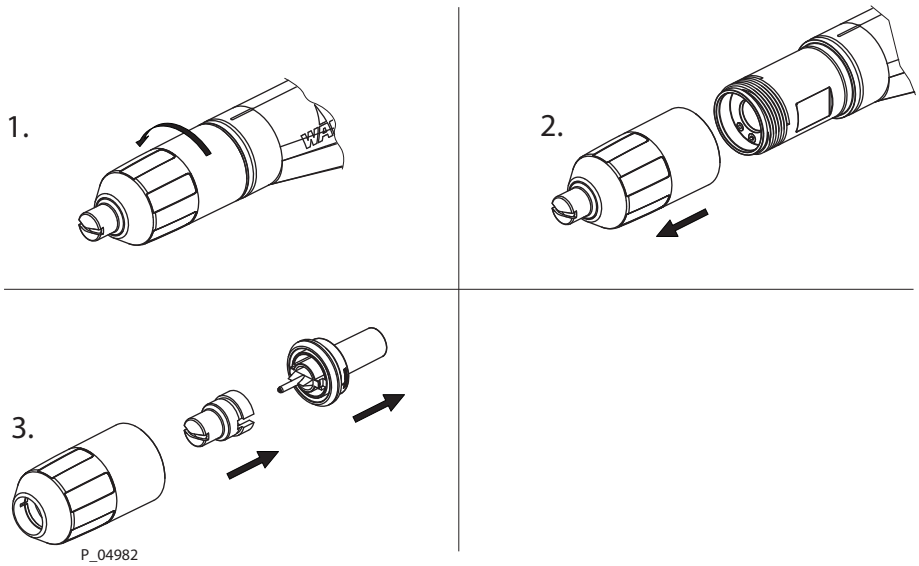

1. Unscrew the union nut from gun housing.
2. Remove the union nut with the nozzle system from the gun body.
   The nozzle system remains inserted in the union nut.
   Note:
   If the nozzle system doesn't remain inserted in the union nut, the nozzle system and union nut must be replaced.
3. The parts can be separated by applying slight pressure to the flat jet nozzle.
4. Remove powder residues from the removed parts and spray gun.
   Note:
   Never place spray gun, or parts of it, in cleaning agent.
   As a rule, the protective wedge needs to be checked for wear and replaced if necessary.

8.4.2 Fitting the Flat Jet Nozzle

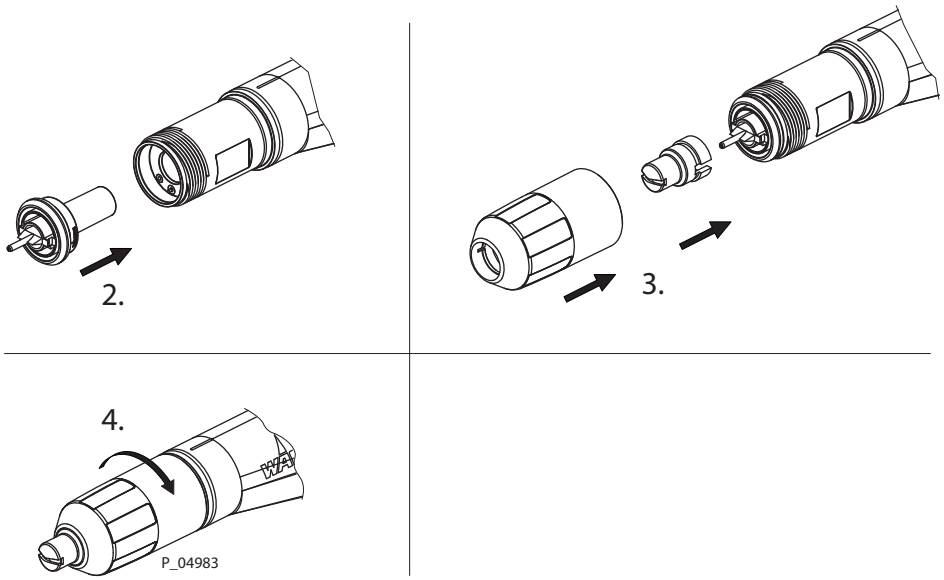

1. Before inserting the electrode holder, the spring contact of the gun body and contact surface of the electrode holder should be checked.
   The spring contact must be clean and move easily, the gun body must also be clean and free of powder deposits.
2. Insert electrode holder into gun housing.
3. Attach flat jet nozzle to electrode holder and attach union nut.
4. Screw union nut onto gun housing until flat jet nozzle can no longer be turned by hand.

8.5 CHANGING THE ROUND JET NOZZLE

8.5.1 Removing the Round Jet Nozzle

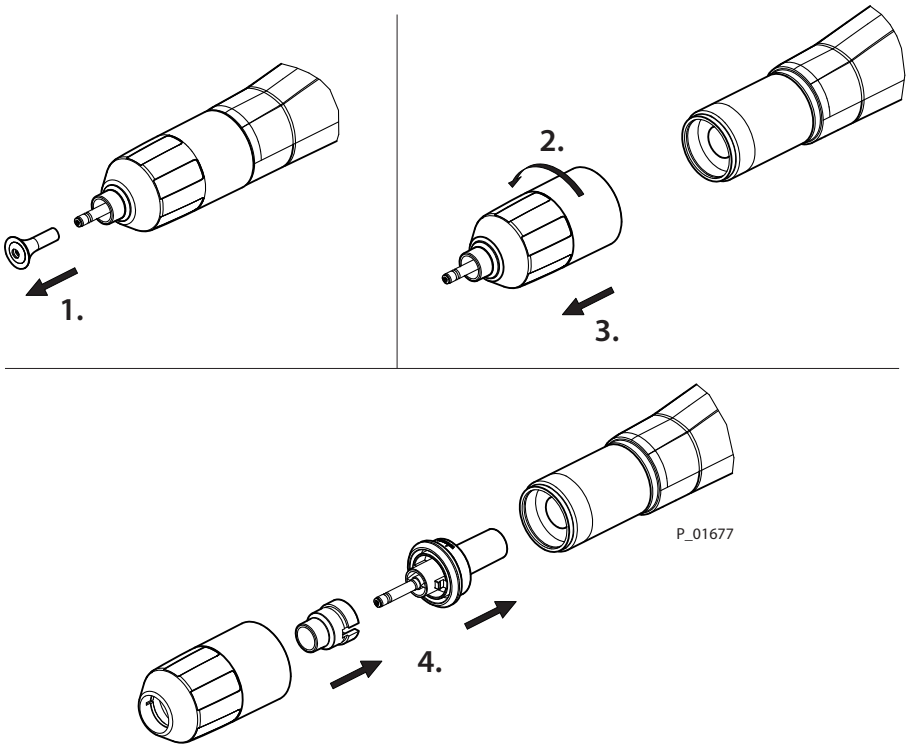

1. Pull off deflector cone.
2. Unscrew the union nut from gun housing.
3. Remove the union nut with the nozzle system from the gun body.
   The nozzle system remains inserted in the union nut.
   Note:
   If the nozzle system doesn't remain inserted in the union nut, the nozzle system and union nut must be replaced.
4. Press nozzle system out of union nut by gently pressing on deflector cone sleeve.
5. Remove powder residues from the removed parts and spray gun.
   Note:
   Never place spray gun, or parts of it, in cleaning agent.
   As a rule, the protective wedge needs to be checked for wear and replaced if necessary.

8.5.2 Fitting the Round Jet Nozzle

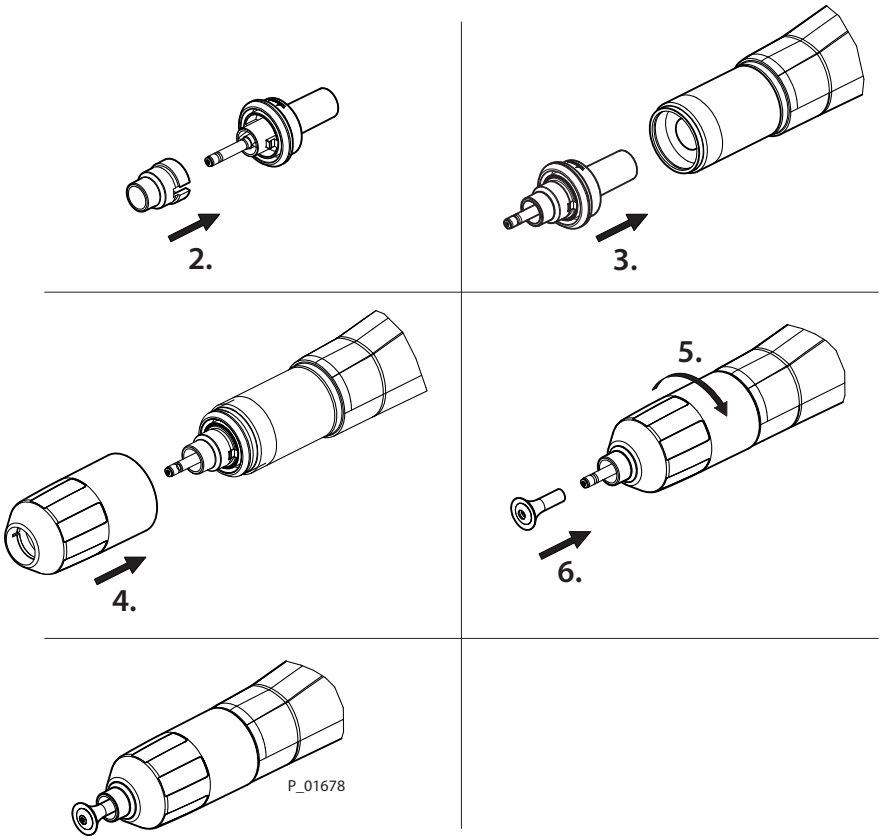

1. Before inserting the electrode holder, the spring contact of the gun body and contact surface of the electrode holder should be checked.
   The spring contact must be clean and move easily, the gun body must also be clean and free of powder deposits.
2. Attach deflector cone sleeve onto electrode holder.
3. Insert electrode holder into gun housing.
4. Slide union nut onto gun housing.
5. Screw union nut onto gun housing (hand-tight).
6. Slide deflector cone over deflector cone sleeve.

8.6 REPLACING THE PROTECTIVE WEDGE

8.6.1 Removing the Protective Wedge

Note:

A wedge tool is available to prevent the protective wedge from being damaged when dismantling and inserting.

Attention: Variant HC 1 does **not** have an exchangeable wedge!

The wedge tool has a removal side (E) and an attachment side (A). Use the right side for the corresponding procedure!

You will find the necessary spare parts and wearing parts in Chapter Spare Parts [▸▸ 63] of this operating manual.

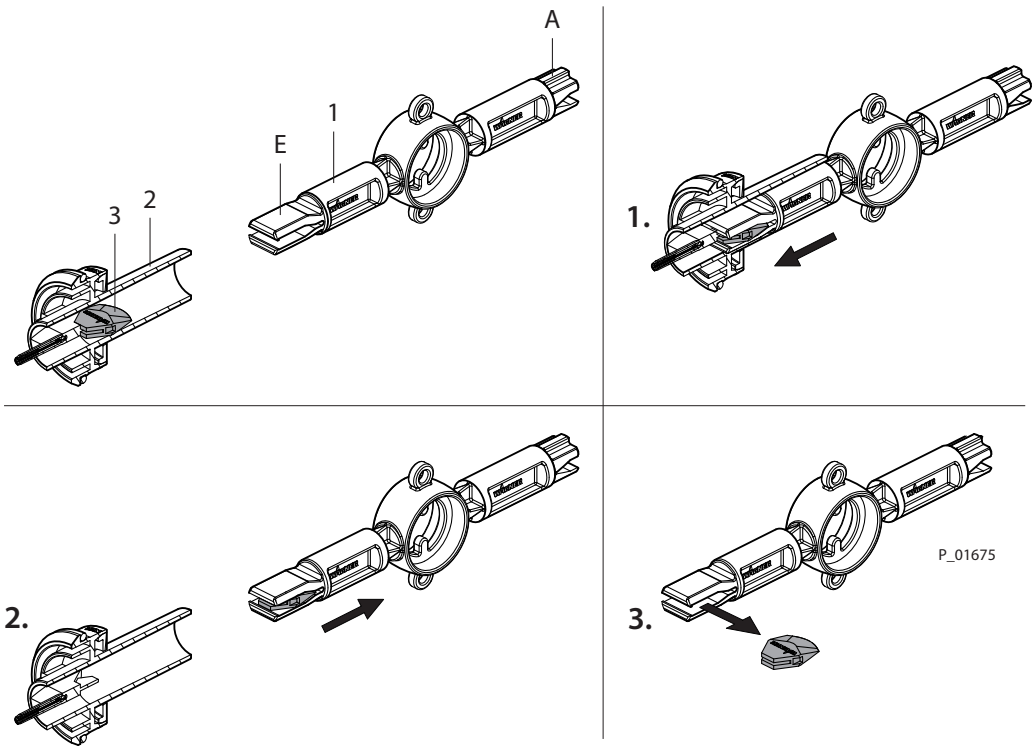

1	Wedge tool
2	Electrode holder (shown with a cut-away view to improve comprehension)
3	Protective wedge (when positioned)

1. Guide wedge tool 1 into electrode holder 2 up to stop.
2. Pull protective wedge 3 out of electrode holder 2 using wedge tool 1.
3. Press protective wedge 3 sideways out of wedge tool 1 manually (without tool).

8.6.2 Installing the Protective Wedge

Note:

The same wedge tool is used to insert the protective wedge.

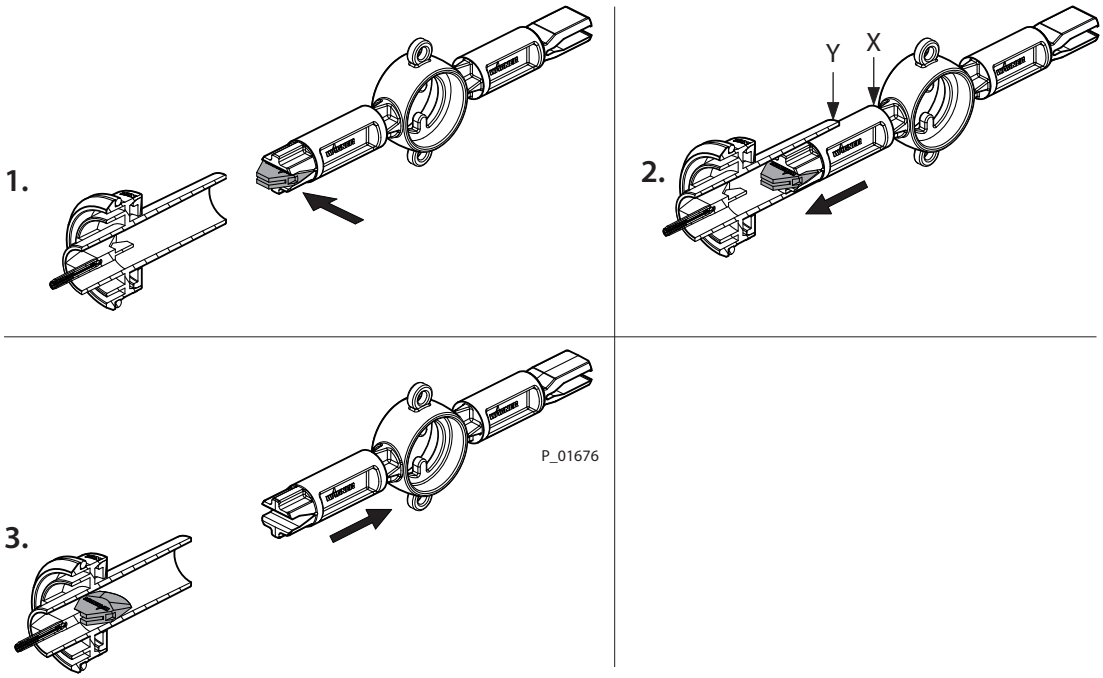

1. Guide protective wedge into wedge tool.
2. Move both parts up to stop in the opening of the electrode holder.
   If it is not possible to push the wedge tool in as far as the X mark, rotate the wedge tool a little until it can be pushed up to the mark.
   The X mark must be flush with the Y end of the electrode holder.
3. The protective wedge is now correctly assembled and the wedge tool can be pulled out of the electrode holder.
4. The protective wedge remains inserted in the electrode holder.
   Prior to re-fitting, check whether the contact points on the electrode holder and in the gun housing have been thoroughly cleaned so that the electrode tip is electrically connected to the high-voltage generator.
5. Mount fan or round spray nozzle with the corresponding electrode holder.

8.7 CHANGING NOZZLE TYPES

NOTICE

Wrong combination of parts!

Powder can be deposited in gaps and lead to incorrect coatings due to paint carryover.

- Only use recommended combinations (see chapter Accessories [▸▸ 54])!

The standard Corona spray gun is delivered with a flat jet nozzle. The nozzle can be changed easily, as described below.

The X1 R electrode holder is needed to change from the flat jet nozzle to the round jet nozzle.

⚠ CAUTION

Electrode tip!

Risk of injury and damage to the device.

- Take care when fitting the electrode holder.

Note:

If changing from the flat jet nozzle to the deflector cone, or the other way around, the depth control must be adjusted.

The round jet nozzle requires increased atomized air volumes of approx. 0.5 Nm^3/h.

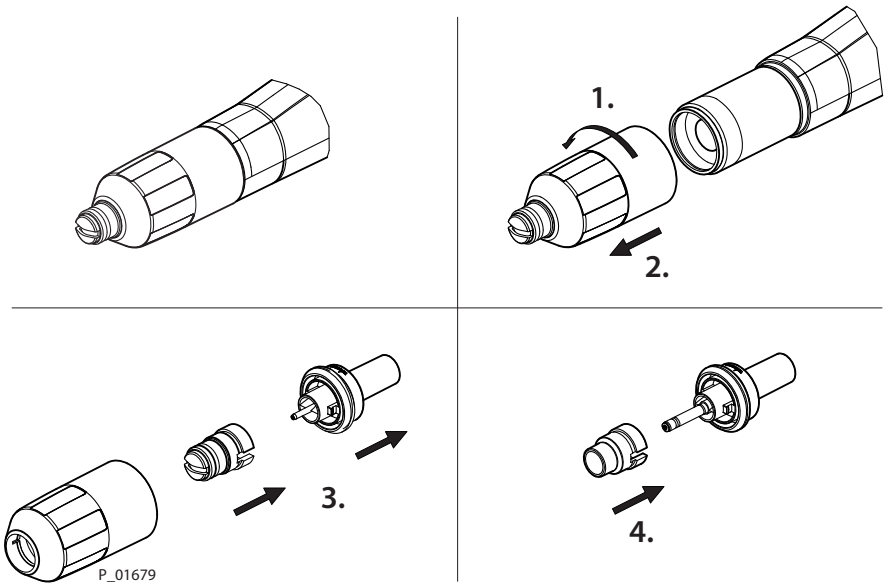

1. Unscrew the union nut from gun housing.
2. Remove the union nut with the nozzle system from the gun body.
   The nozzle system remains inserted in the union nut.
   Note:
   If the nozzle system doesn't remain inserted in the union nut, the nozzle system and union nut must be replaced.
3. The parts can be separated by applying slight pressure to the flat jet nozzle.
4. Attach deflector cone sleeve onto X1 R electrode holder.

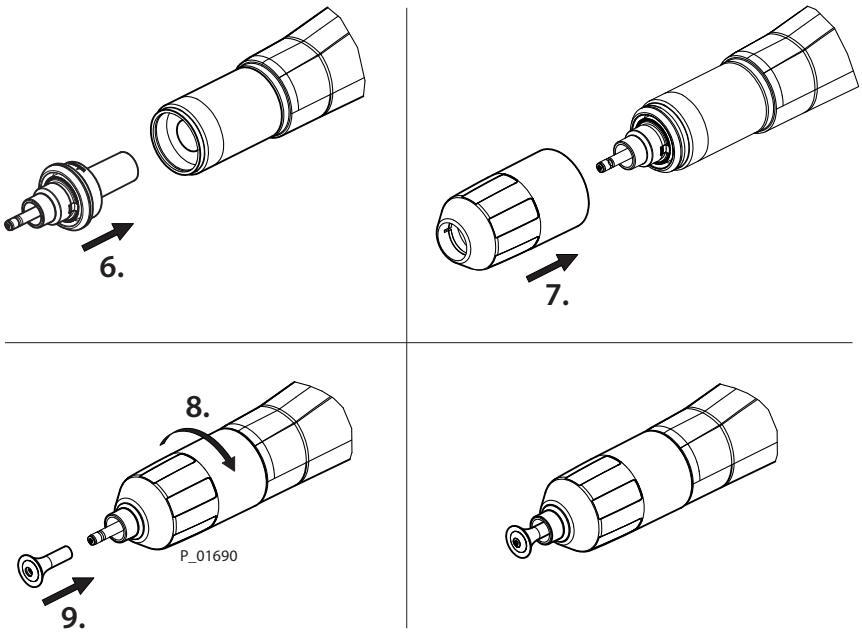

5. Before inserting the electrode holder, the spring contact of the gun body and contact surface of the electrode holder should be checked.
   The spring contact must be clean and move easily, the gun body must also be clean and free of powder deposits.
6. Insert electrode holder into gun housing.
7. Slide union nut onto gun housing.
8. Screw union nut onto gun housing (hand-tight).
9. Slide deflector cone over deflector cone sleeve.

8.8 ASSEMBLING THE ANGLE ADAPTER

8.8.1 Removing the Nozzle and Electrode Holder

The standard automatic gun is delivered either with a flat jet nozzle or a round jet nozzle. The nozzle can be changed easily, as described below.

Note:

A 0-90° angle adapter is necessary to perform the change, as listed in chapter Angle Adapter [▸▸ 59].

A flat jet nozzle or a round jet nozzle can be used in the angle adapter.
The angle adapter is supplied with a special electrode holder (order no. 2431975) and a flat jet nozzle (order no. 2420243), as standard.

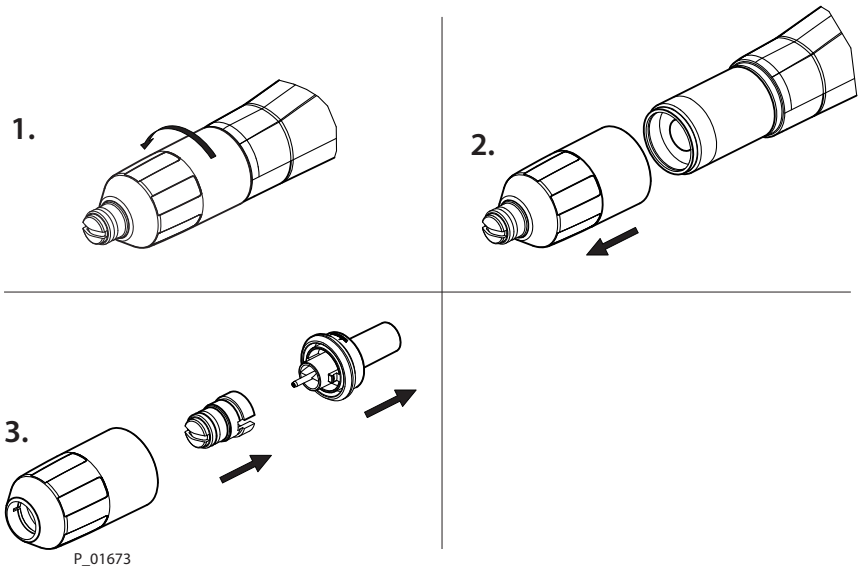

1. Unscrew the union nut from gun housing.
2. Remove the union nut with the nozzle system from the gun body.
   The nozzle system remains inserted in the union nut.
   Note:
   If the nozzle system doesn't remain inserted in the union nut, the nozzle system and union nut must be replaced.
3. The parts can be separated by applying slight pressure to the flat jet nozzle.
4. Remove powder residues from the removed parts and spray gun.
   Note:
   Never place spray gun, or parts of it, in cleaning agent.
   As a rule, the protective wedge needs to be checked for wear and replaced if necessary.

8.8.2 Fitting the Angle Adapter

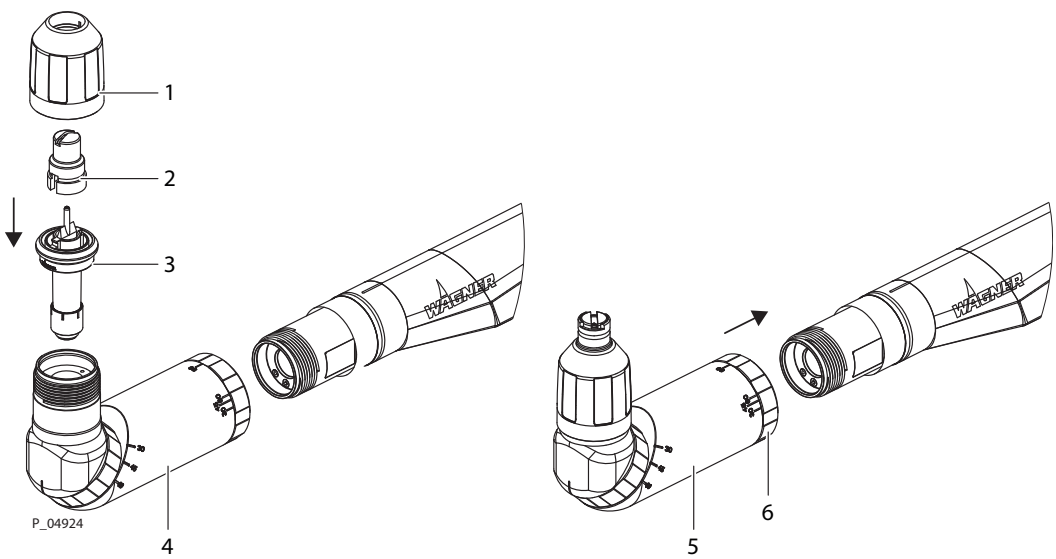

NOTICE

Dirty angle adapter during angle adjustment!

Problems with tightness or paint carryover!

- Clean the angle adapter thoroughly and remove any powder residues before the angle adjustment.

1. Install electrode holder 3 together with nozzle 2 in nozzle insert 4 and tighten union nut 1.
2. Push angle adapter 5 onto the gun body and gently screw threaded sleeve 6.
3. Swivel angle adapter 5 into the desired position and then tighten threaded sleeve 6 well.

8.8.3 Cleaning the Angle Adapter

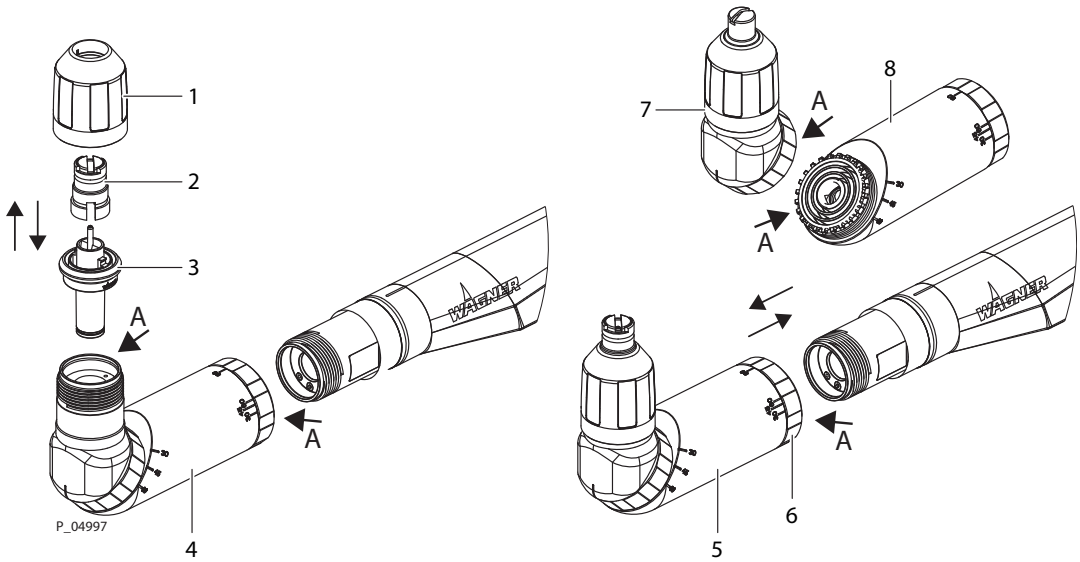

1. Loosen threaded sleeve 6 and separate angle adapter 5 from gun body.
2. Unscrew union nut 1 and carefully pull out electrode holder 3 together with the nozzle 2.
3. Unscrew the swivel attachment 7 from the gun connection 8.
4. Carefully blow out the areas marked with A with a compressed air gun and remove any powder residues.
5. Assembly in reverse order.

8.8.4 Replacing the Wearing Parts

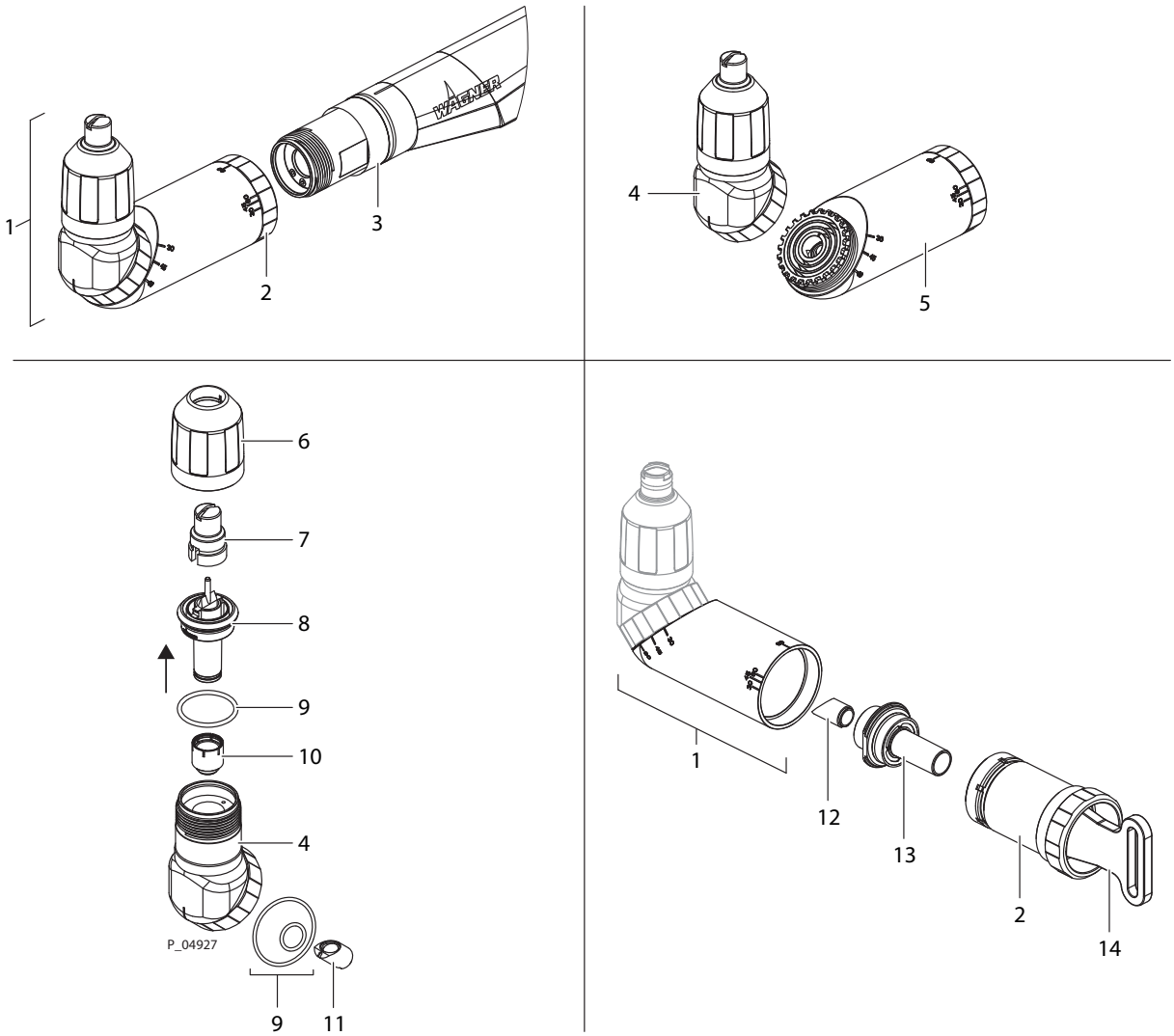

Disassembly:

1. Loosen threaded sleeve 2 and separate angle adapter 1 from gun body 3.
2. Unscrew swivel attachment 4 from connection body 5.
3. Loosen union nut 6.
4. Pull electrode holder 8 with nozzle 7 out of swivel attachment 11.
   Note:
   Do not damage the electrode holder when pulling it out and inserting it.
5. Pull the diffuser 10 off of electrode holder 8.
6. Pull angle insert 11 out of the swivel attachment 4.
7. If necessary, replace the O-rings 9.
8. Unscrew threaded sleeve with locking sleeve 2 with mounting tool 14.
9. Pull pistol connection 13 and angle insert 12 out of the angle adapter 1.
10. Clean all components thoroughly and remove any powder residues.
11. Replace the wearing parts with new components.

For spare and wear parts, see chapter X1 angle adapter, 0-90° [▸▸ 68].

Assembly:

1. Place diffuser 10 on electrode holder 8 and insert it, together with nozzle 7, into the swivel attachment 4.
2. Put on union nut 6 and tighten it well.
3. Insert angle insert 11 into swivel attachment 4 and ensure correct alignment of the alignment surface.
4. Screw assembled swivel attachment 4 onto connection body 5.
5. Insert angle insert 12 and gun connection 13 in angle adapter 1 and ensure correct alignment of the alignment surface.
6. Screw in threaded sleeve with locking sleeve 2 using mounting tool 14 and tighten them well.
   Make sure that threaded sleeve 2 can still be easily turned at the rear, to be able to screw the angle adapter 1 onto the gun body 3.
7. Mount the angle adapter to the gun again.

8.9 MOUNTING THE DOUBLE ADAPTER

8.9.1 Removing the Nozzle and Electrode Holder

The standard automatic gun is delivered either with a flat jet nozzle or a round jet nozzle. The nozzle can be changed easily, as described below.

Note:

The double adapter is needed to perform the change, as shown in chapter Double Adapter [▸▸ 57].

Either a flat jet nozzle or a round jet nozzle can be fitted into the double adapter.

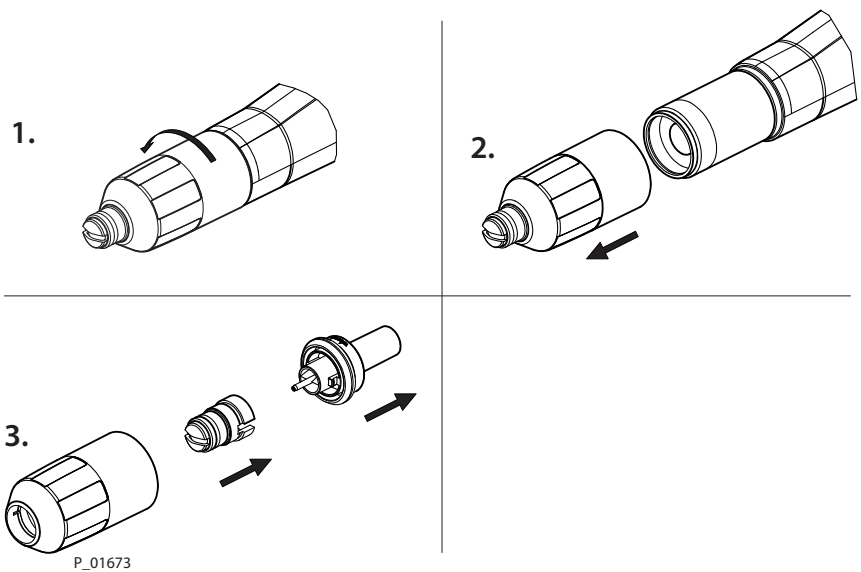

1. Unscrew the union nut from gun housing.
2. Remove the union nut with the nozzle system from the gun body.
   The nozzle system remains inserted in the union nut.
   Note:
   If the nozzle system doesn't remain inserted in the union nut, the nozzle system and union nut must be replaced.

3. The parts can be separated by applying slight pressure to the flat jet nozzle.
4. Remove powder residues from the removed parts and spray gun.
   Note:
   Never place spray gun, or parts of it, in cleaning agent.
   As a rule, the protective wedge needs to be checked for wear and replaced if necessary.

8.9.2 Installation of the Double Adapter

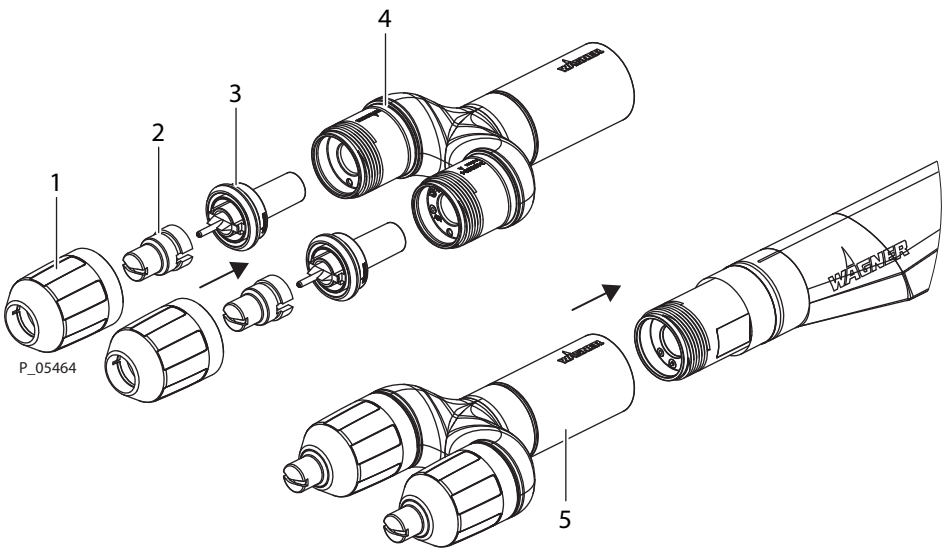

1. Install electrode holder 3 together with nozzle 2 in nozzle insert 4 and tighten union nut 1.
2. Place the double adapter 5 on the gun body and tighten it.

8.9.3 Cleaning the Double Adapter

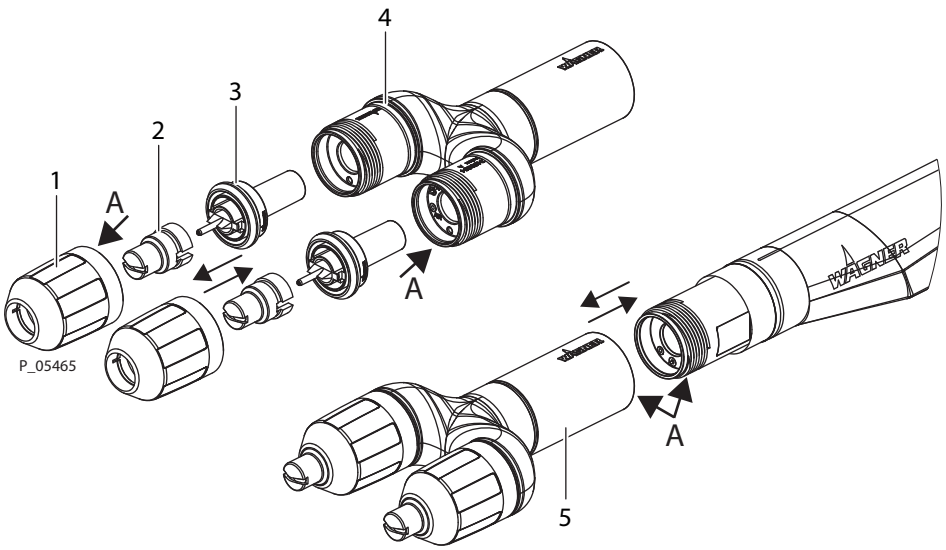

1. Loosen the double adapter 5 and separate it from the gun body.
2. Unscrew union nut 1 and carefully pull out electrode holder 3 together with the nozzle 2.
3. Carefully blow out the areas marked with A with a compressed air gun and remove any powder residues.
4. Assembly in reverse order.

8.9.4 Replacing the Wearing Parts

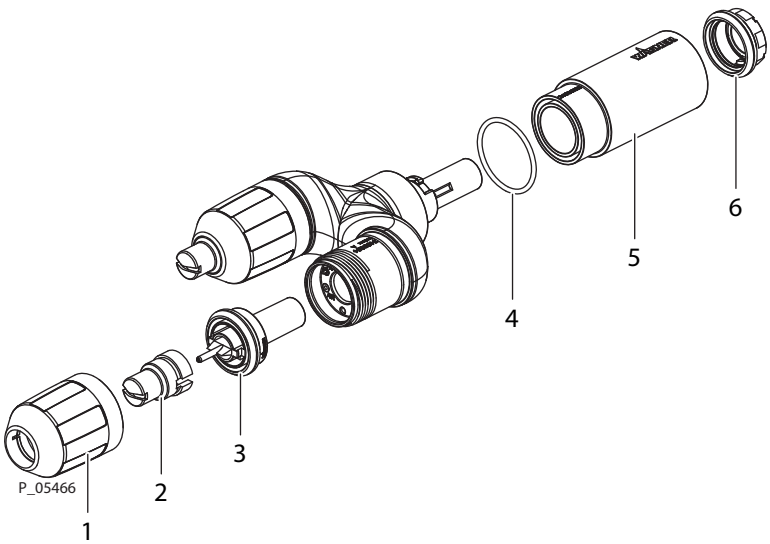

1. Unscrew union nut 1.
2. Pull out electrode holder 3 and nozzle 2.
3. Gently turn cylindrical union nut 5 (bayonet fitting) and pull it off.
4. Unscrew contact ring 6.

5. Pull off O-ring 4.
6. Clean all components thoroughly and remove any powder residues.
7. Replace the wearing parts with new components.
8. Assembly in reverse order.

For spare and wear parts, see chapter X1 double adapter [▸▸ 67].

8.10 ASSEMBLY OF THE CORONASTAR

CoronaStar is a retrofit set for automatic guns for achieving even better surface quality (e.g., it reduces the orange peel effect).

⚠ DANGER

Danger from electric current!

Danger to life and equipment damage.

- The system may only be connected by skilled electricians.
- Operate according to the safety regulations, fire protection and electrotechnical regulations.
- Must be de-energized before work is commenced on active parts.

ⓘ NOTICE

Electrical spark discharges if assembled incorrectly!

Damage to the device due to electrically charged CoronaStar and spark discharges.

- The CoronaStar must be correctly inserted and engaged in the tab of the automatic gun.

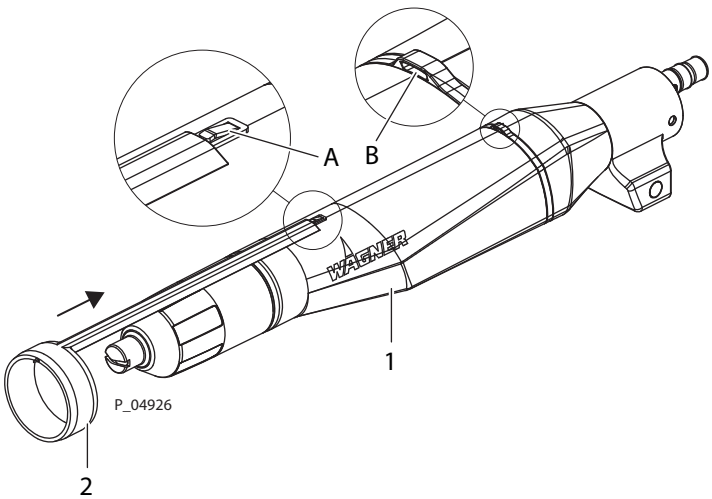

1. Switch off the high voltage and the powder feed and secure them against being inadvertently switched on.

2. Slide CoronaStar 2 onto automatic gun 1 and make sure that tab A engages in eyelet B.
   CoronaStar correctly mounted:

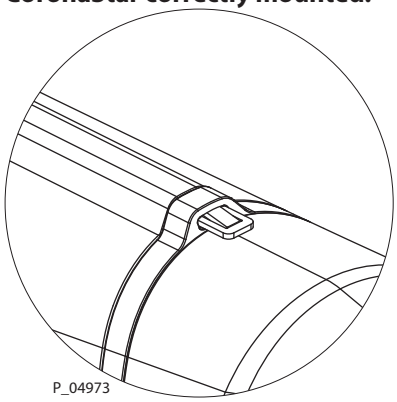

3. The automatic powder gun is ready for use again.

8.11 CLEANING THE CORONASTAR

CoronaStar is a retrofit set for automatic guns for achieving even better surface quality (e.g., it reduces the orange peel effect).

⚠ DANGER

Danger from electric current!

Danger to life and equipment damage.

- The system may only be connected by skilled electricians.
- Operate according to the safety regulations, fire protection and electrotechnical regulations.
- Must be de-energized before work is commenced on active parts.

ⓘ NOTICE

Electrical spark discharges if assembled incorrectly!

Damage to the device due to electrically charged CoronaStar and spark discharges.

- The CoronaStar must be correctly inserted and engaged in the tab of the automatic gun.

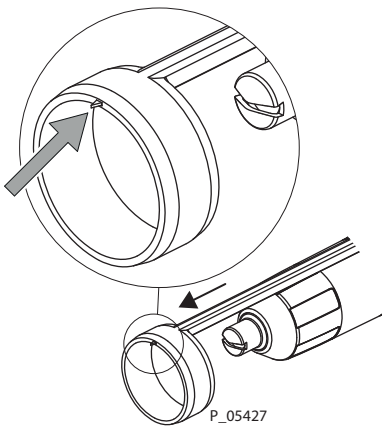

The electrode tip of the CoronaStar can become clouded with powder during operation, which can cause caking. These cakings should be removed, at regular short intervals, with a copper brush, to ensure optimal function.

9 TROUBLESHOOTING AND RECTIFICATION

⚠ DANGER

Incorrect maintenance/repair!

Danger to life and equipment damage.

- WAGNER devices, protective systems and safety, monitoring and control equipment may only be serviced/repaired as defined in Directive 2014/34/EC (ATEX) by trained WAGNER service personnel or skilled persons in accordance with TRBS 1203! Note national regulations!
- Service, repair or replacement of devices or parts of devices may only be performed outside the hazard area!

Malfunction	Cause	Rectification
No electrostatic (e.g., no wrap around or no powder adhesion)	Fault in the high-voltage generator	Contact a WAGNER service center
	Electrical cable from gun to control unit faulty	Contact a WAGNER service center
	Cascade in gun faulty	Contact a WAGNER service center
Poor powder wrap-around, backspray	Insufficient or no grounding	See chapter Grounding [▸▸ 25]
Spray pattern is uneven	Parts of nozzle system worn	Replace worn parts
Cracks in the gun housing	Improper handling of the powder spray gun	Gun housing must be replaced
		Contact a WAGNER service center
Powder outlet uneven or inadequate	Contamination	Blow through powder feeding parts
	Powder sintering	Clean powder feeding parts
	Feed unit contaminated	See operating manuals for the related devices connected
	Feed air / dosing air ratio incorrect	Adjust at control module resp. control unit
	Wear on powder injector nozzle	Replace worn parts on powder injector [1])
Error display on control unit "ground monitoring"	Hexagon nut at the connection is tightened poorly or not at all	Tighten the hexagon nut at the connection
	Shield in the connection cable is broken	Replace the broken connection cable

1.) You will find the wear parts and spare parts in the powder injector operating manual.

10 INSPECTIONS IN ACCORDANCE WITH DIN EN 50177: 2009

If the system is used for electrostatic coating with ignitable coating powders, the test must be performed in accordance with EN 50177:2009+A1:2012 according to the following overview table [▸▸ 51].

10.1 ABBREVIATIONS

ER	Employer	FT	Function test
SP	Skilled person	ME	Measurement
FPE	Fire protection engineer	SI	Standard inspection
QEW	Electrician	VI	Visual inspection
MFR	Manufacturer	CM	Continuous monitoring
TP	Trained person	TI	Technical inspection

10.2 OVERVIEW TABLE

Section	Type of inspection	Requirements	Inspection by	Type of inspection	Inspection interval
1	Checking the effectiveness of technical ventilation	Checking the effectiveness of technical ventilation	TP/SP	ME Measurements of air flow speed/ air quantities Check the differential pressure indicator.	Continuously
2	Link between technical ventilation equipment and high voltage, compressed air and coating material supply	The technical ventilation should be interlocked such that the coating material supply and high voltage cannot be switched on, while the technical ventilation is not working effectively.	SP	FT Test whether the system is safely stopped and the coating material supply, supply air, and high voltage are switched off when the ventilation is shut down.	Annually
3	Parts carrying high voltage outside the spray area	Parts carrying high voltage outside the spray area must be routed such that discharges which put people at risk do not occur.	SP	FT Inspect and test (e.g., by measurement) whether all parts carrying high voltage do not result in discharge which puts people at risk.	Weekly
4	Effectiveness of grounding	All conductive components of the system, such as floors, walls, ceilings, barriers, transport equipment, work pieces, powder tanks, moving devices or structural parts, etc. in the spray area, with the exception of parts under high voltage during operation, must be connected to the grounding system. Parts of the booth must be grounded in accordance with EN 16985.	SP	VI/ME/CM Visual check of ground connections, perform function test on grounding switch, measurement of grounding resistors.	Weekly
5	Measures to take if conductive components are insufficiently grounded	If sufficient grounding of conductive parts cannot be ensured, their discharge energy must not exceed the permissible value.	SP	ME/CM Measurement of discharge energy.	Weekly

Section	Type of inspection	Requirements	Inspection by	Type of inspection	Inspection interval
6	Ground leaking resistance from the work piece attachment point	The ground leaking resistance of the attachment point of every work piece may be 1 megohm at most (measuring voltage must be 500 V or 1000 V). The design of the work piece holder must ensure that the work pieces remain grounded during coating.	SP	ME/CM Measure the ground leaking resistance (ground potential of the workpiece mount) maximum 1 MOhm @ 500 V/1000 V.	Weekly
7	Measures to take if the work pieces are insufficiently grounded	If sufficient work piece grounding in accordance with section 6 cannot be ensured, appropriate equipment, e.g., ionizers, must be used to discharge electric charges on the work piece. Such equipment must not exceed the permitted discharge energy of the spraying systems with which it is used. In terms of permitted discharge energy, this equipment must be put through the same inspections as the powder spraying systems used with it. The discharge equipment must be interlocked with the spraying system such that the high voltage is switched off and that coating cannot take place if the discharge equipment malfunctions.	SP	ME/FT/CI Measurement of discharge energy, check the monitoring equipment's test function by triggering it.	Weekly
8	Effectiveness of the manually or automatically actuated fire extinguishing systems (room protection system)	Effectiveness of the manually or automatically actuated fire extinguishing systems (room protection system).	MFR/FPE	FT Trigger fire extinguishing system, observe manufacturer's requirements.	6 months

11 DISASSEMBLY AND DISPOSAL

11.1 DISASSEMBLY

⚠ WARNING

Incorrect disassembly!

Risk of injury and damage to the device.

- Before starting disassembly:
  - Switch off the energy and compressed air supply.
  - Ensure the grounding of all system components.
  - Secure system against being switched back on without authorization.
- Observe the operating manuals when carrying out all work.

1. Switch off the system.
2. Lock the compressed air supply and decompress system.
3. Disconnect the gun connection cable from control unit.
4. Remove the powder feed hose from the spray gun and from the powder injector.
5. Remove the atomizing air hose from the spray gun and from the control unit.

11.2 DISPOSAL

ⓘ NOTICE

Do not dispose of used electrical equipment with household refuse!

In accordance with European Directive 2012/19/EU on the disposal of used electrical equipment and its implementation in national law, this product may not be disposed of with the household refuse, but must be recycled in an environmentally correct manner.

- WAGNER or one of our dealers will take back your used WAGNER electric or electronic equipment and will dispose of it for you in an environmentally-friendly way.
- Please contact one of our service points, one of our representatives or us directly.

12 ACCESSORIES

12.1 GUN HOLDER

Order no.	K	Designation	
2419801		Gun bracket, short	 P_04928
2424720		Robot holder, PEA-X1 SO	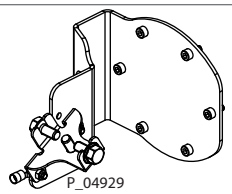 P_04929
2424723		Robot holder, PEA-X1 TO	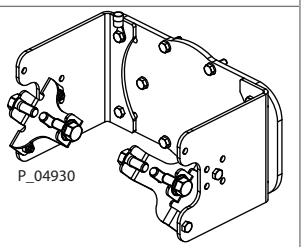 P_04930

12.2 NOZZLE SYSTEMS

NOTICE

Wrong combination of parts!

Powder can be deposited in gaps and lead to incorrect coatings due to paint carryover.

- Only use the recommended combinations!

Only the following combinations can be used! Please note the respective color coding in parentheses!

12.2.1 Flat Jet Nozzles System X1

Order no.	K	Designation	
2429073	♦	**X1 electrode holder, cpl. ET (white)**	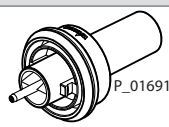 P_01691
Can be combined with:			
2420243	♦	X1 flat jet nozzle, F1	 P_04985
2428515	♦	X1 cross nozzle, 90°	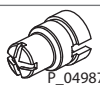 P_04987

Order no.	K	Designation	
2428283	♦	X1 angular nozzle, 30°	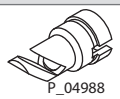 P_04988
2428284	♦	X1 angular nozzle, 45°	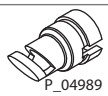 P_04989
2428285	♦	X1 angular nozzle, 60°	 P_04990

♦ = Wearing parts

12.2.2 X1 F Flat Jet Nozzles System

Order no.	K	Designation	
2322529	♦	**Electrode holder, X1 F ET (yellow)**	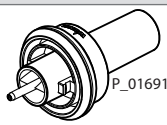 P_01691
Can be combined with:			
2321976	♦	Flat jet nozzle, X1, assy.	 P_04984

♦ = Wearing parts

Note: Is preferably used for the PEM-X1 manual gun!

12.2.3 X1 HC (D8) Flat Jet Nozzles System

Version D8 (with smaller internal diameter)

For more information, also see chapter Version D8 [▸▸ 18]!

Order no.	K	Designation	
2429198	♦	**X1 conversion set, HC cpl.**	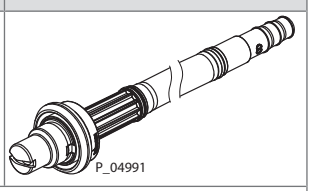 P_04991
Consists of:			
2429189	♦	X1 electrode holder, HC cpl. ET (gray)	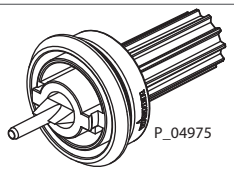 P_04975
2431554	♦	Powder tube, D8-10 ET	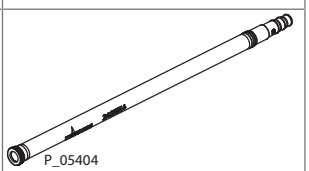 P_05404
2423562	♦	X1 flat jet nozzle, HC1	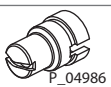 P_04986

♦ = Wearing parts

12.2.4 X1 R Round Jet Nozzles System

Order no.	K	Designation	
2322490	♦	**X1 electrode holder, X1 R ET (yellow)**	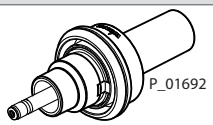 P_01692
2322493	♦	**Electrode holder, X1 R (yellow) + nozzles**	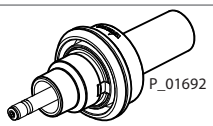 P_01692
Can be combined with:			
2321981	♦	Deflector cone, D18, complete	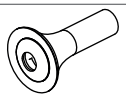 P_01665
2321980	♦	Deflector cone, D25, complete	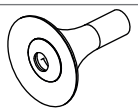 P_01666
2321171	♦	Deflector cone, D34, complete	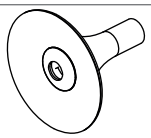 P_01667

♦ = Wearing parts

12.2.5 Nozzle extension

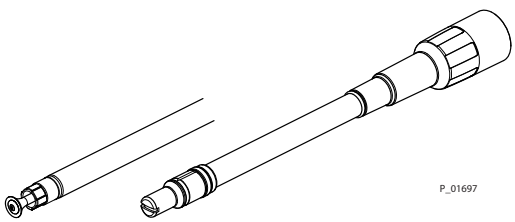

X1 VL Nozzle Extension - 150/300/500

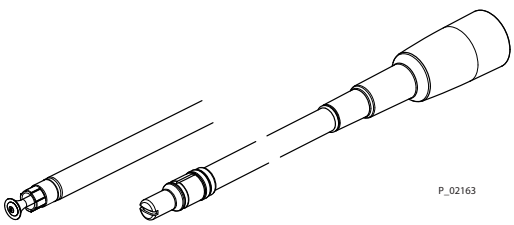

X1 VL Nozzle Extension - 750

Order no.	K	Designation
2323366		**Nozzle extension, X1 VL 150 (150 mm; 5.91 inches)**
2323356		**Nozzle extension, X1 VL 300 (300 mm; 11.81 inches)**
2323338		**Nozzle extension, X1 VL 500 (500 mm; 19.68 inches)**
2330497		**Nozzle extension, X1 VL 750 (750 mm; 29.53 inches)**

Note:

The nozzle extensions include the flat jet nozzles system!

To use with the round jet nozzles system, see chapter Round Jet Nozzles System [▸▸ 57].

12.2.5.1 Flat Jet Nozzles System

Order no.	K	Designation	
2323401	♦	**Nozzle insert, X1 VL F (yellow)**	 P_04993
Can be combined with:			
2324147	♦	Flat jet nozzle, X1 VL ET	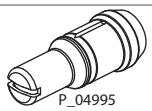 P_04995

♦ = Wearing parts

12.2.5.2 Round Jet Nozzles System

Order no.	K	Designation	
2323461	♦	**Nozzle insert, X1 VL R (yellow)**	 P_04992
Can be combined with:			
2321981	♦	Deflector cone, D18, complete	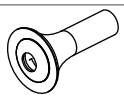 P_01665
2321980	♦	Deflector cone, D25, complete	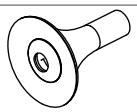 P_01666
2321171	♦	Deflector cone, D34, complete	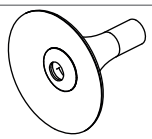 P_01667

♦ = Wearing parts

12.3 DOUBLE ADAPTER

NOTICE

Wrong combination of parts!

Powder can be deposited in gaps and lead to incorrect coatings due to paint carryover.

- Only use the recommended combinations!

Order no.	K	Designation	
2436638	♦	X1 double adapter	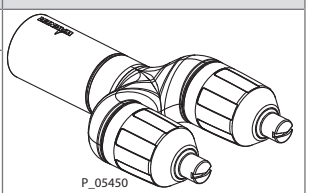 P_05450
2436625	♦	X1 double adapter, HC1	
Can be combined with:			
For flat jet application:			

Order no.	K	Designation	
2429073	♦	**X1 electrode holder, cpl. ET (white)**	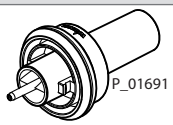 P_01691
2420243	♦	X1 flat jet nozzle, F1	 P_04985
2428515	♦	X1 cross nozzle, 90°	 P_04987
2428283	♦	X1 angular nozzle, 30°	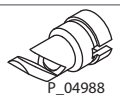 P_04988
2428284	♦	X1 angular nozzle, 45°	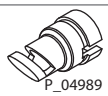 P_04989
2428285	♦	X1 angular nozzle, 60°	 P_04990
For round jet application:			
2322493	♦	**Electrode holder, X1 R (yellow) + nozzles**	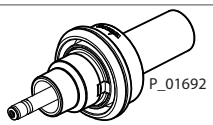 P_01692
2322490	♦	**X1 electrode holder, X1 R ET (yellow)**	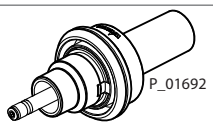 P_01692
2321981	♦	Deflector cone, D18, complete	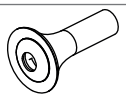 P_01665
2321980	♦	Deflector cone, D25, complete	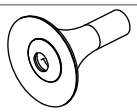 P_01666
2321171	♦	Deflector cone, D34, complete	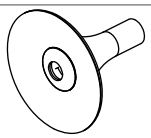 P_01667
For HC application (with smaller inside diameter, D8):			
2429189	♦	X1 electrode holder, HC cpl. ET (gray)	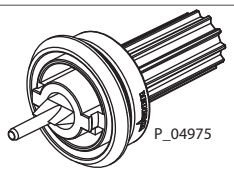 P_04975
2423562	♦	X1 flat jet nozzle, HC1	 P_04986

♦ = Wearing parts

IMPORTANT: For both variants, always use powder tube D10-12 (order no. 2431552). **Also for the HC1 variants**.

12.4 ANGLE ADAPTER

ⓘ NOTICE

Wrong combination of parts!

Powder can be deposited in gaps and lead to incorrect coatings due to paint carryover.

- Only use the recommended combinations!

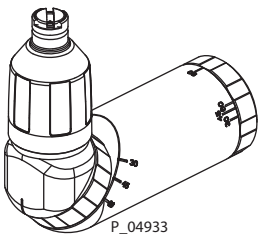

Order no.	K	Designation	
2431974		**X1 angle adapter, 0-90°**	
Can be combined with:			
For flat jet application:			
2431975	♦	**X1 electrode holder, angle adapter 0-90°**	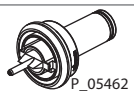 P_05462
2420243	♦	X1 flat jet nozzle, F1	 P_04985
2428515	♦	X1 cross nozzle, 90°	 P_04987
2428283	♦	X1 angular nozzle, 30°	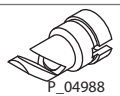 P_04988
2428284	♦	X1 angular nozzle, 45°	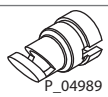 P_04989
2428285	♦	X1 angular nozzle, 60°	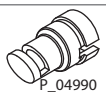 P_04990
For round jet application:			
2441805	♦	**X1 R electrode holder, angle adapter 0-90°**	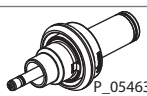 P_05463

Order no.	K	Designation	
2321981	♦	Deflector cone, D18, complete	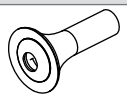 P_01665
2321980	♦	Deflector cone, D25, complete	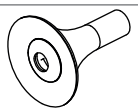 P_01666
2321171	♦	Deflector cone, D34, complete	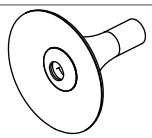 P_01667

♦ = Wearing parts

Note:

The angle adapter is supplied with a special electrode holder (order no. 2431975) and a flat jet nozzle (order no. 2420243), as standard.

For spare parts and standard configuration, see chapter X1 angle adapter, 0-90° [▸▸ 68].

12.5 KINK PROTECTOR

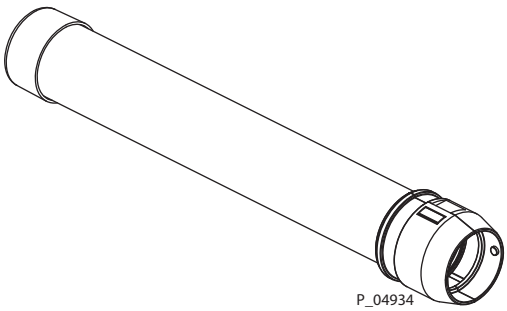
P_04934

Order no.	K	Designation
2419968		Kink protector PEA-X1, assy.
2429055		Kink protector, divisible, PEA-X1 assy.

12.6 CORRUGATED TUBES

Order no.	K	Designation
2423435		Corrugated tube
2419989		Corrugated tube, divisible

12.7 RETROFIT SET CORONASTAR

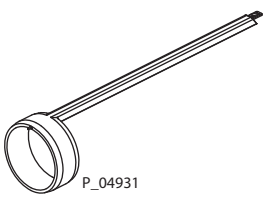
P_04931

Order no.	K	Designation
2424655		CoronaStar PEA-X1, assy.

12.8 D10-D12 POWDER COUPLING

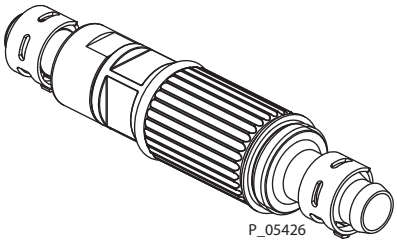

Order no.	K	Designation
2438592	⋆	D10-D12 Powder Coupling

⋆ Available as an accessory, not included in the scope of delivery

12.9 WEDGE TOOL

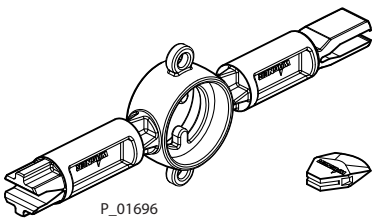

Order no.	K	Designation
2324124	⋆	Wedge tool, X1 + 20 wedges

⋆ Available as an accessory, not included in the scope of delivery

12.10 EXTENSION DUCT

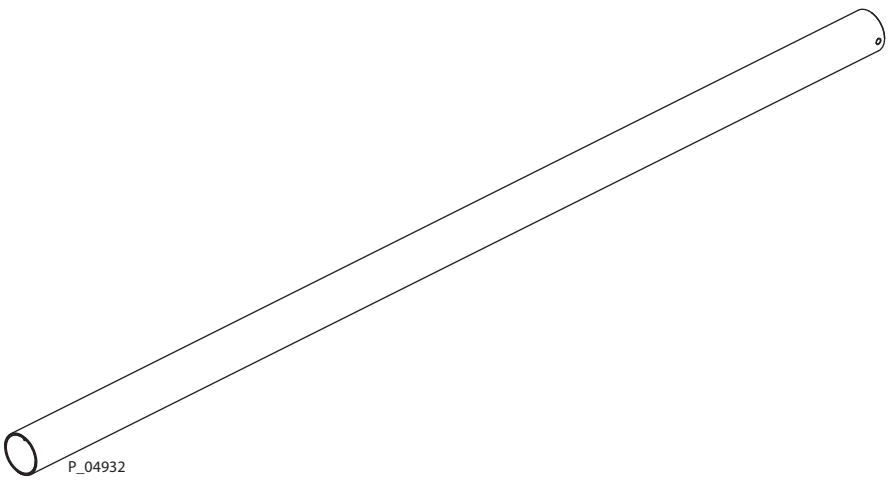

Order no.	K	Designation
2419981		Extension duct, 0.85
2419982		Extension duct, 1.1
2419983		Extension duct, 1.4
2419984		Extension duct, 1.8

12.11 POWDER HOSE

Order no.	K	Designation
351798 *	♦	Powder hose, Ø 8 mm
351794 *	♦	Powder hose, Ø 9 mm
2310699	♦	Powder hose, Ø 10 mm
2307502	♦	Powder hose, Ø 11 mm

Wearing parts = ♦

* Can only be used with optionally available D8 powder tube!

12.12 ATOMIZING AIR HOSE

Order no.	K	Designation
9982079		Atomizing air hose, black, Ø 6 mm

12.13 GUN CONNECTION CABLE

Order no.	K	Designation
2442705		Connection cable, PEA-X1 L = 0.5 m
2419539		Connection cable, PEA-X1 L = 5 m
2419540		Connection cable, PEA-X1 L = 10 m
2419541		Connection cable, PEA-X1 L = 20 m

12.14 POWDER MEASURING ADAPTER

⚠ WARNING

Risk of explosion due to electrostatic charging!

Danger to life and equipment damage.

- Only use powder measurement adapter when high voltage is switched off!

The powder measuring adapter is used to measure powder quantities for the PEM-X1/PER-X1/PEA-X1 gun. The powder measuring adapter is slid onto the nozzle.

12.14.1 Powder Measuring Adapter for X1 Flat Jet Nozzle

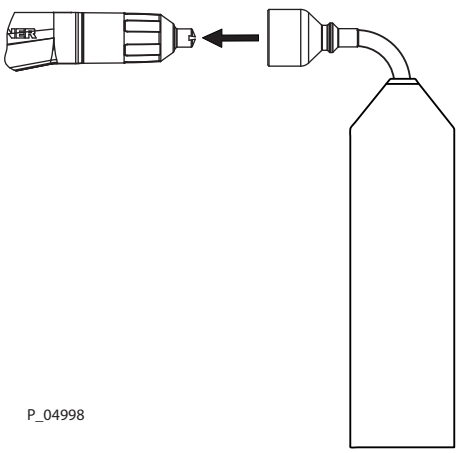

Order no.	K	Designation
2428701		Universal powder measuring adapter, cpl.

13 SPARE PARTS

13.1 HOW TO ORDER SPARE PARTS

Always supply the following information to ensure delivery of the right spare part:

Order number, designation and quantity

The quantity need not be the same as the number given in the quantity column „Stk“ on the list. This number merely indicates how many of the respective parts are used in each component.

The following information is also required to ensure smooth processing of your order:

- Billing address
- Delivery address
- Name of the person to be contacted in the event of any queries
- Type of delivery (normal mail, express delivery, air freight, courier etc.)

Identification in spare parts lists

Explanation of column „K“ (marking) in the following spare parts lists:

♦ Wearing parts. Wearing parts are not included in the warranty.

⋆ Included in service set

● Not part of the standard equipment but available as a special accessory

Explanation of order no. column:

-- Item not available as spare part.

/ Position does not exist.

13.2 NOTES ON THE USE OF SPARE PARTS

⚠ DANGER

Incorrect maintenance/repair!

Danger to life and equipment damage.

- Only a WAGNER service center or a specially trained person may carry out repairs and replace parts.
- Use only WAGNER original spare parts and accessories.
- Only repair and replace parts that are listed in the spare parts chapter and that are assigned to the device.
- Before all work on the device and in the event of work interruptions:
  - Switch off the energy and compressed air supply.
  - Relieve spray gun and device pressure.
  - Secure the spray gun against actuation.
- Observe the operating and service manuals of the individual components for all work.

13.3 AUTOMATIC GUN PEA-X1 WITH FLAT JET NOZZLE

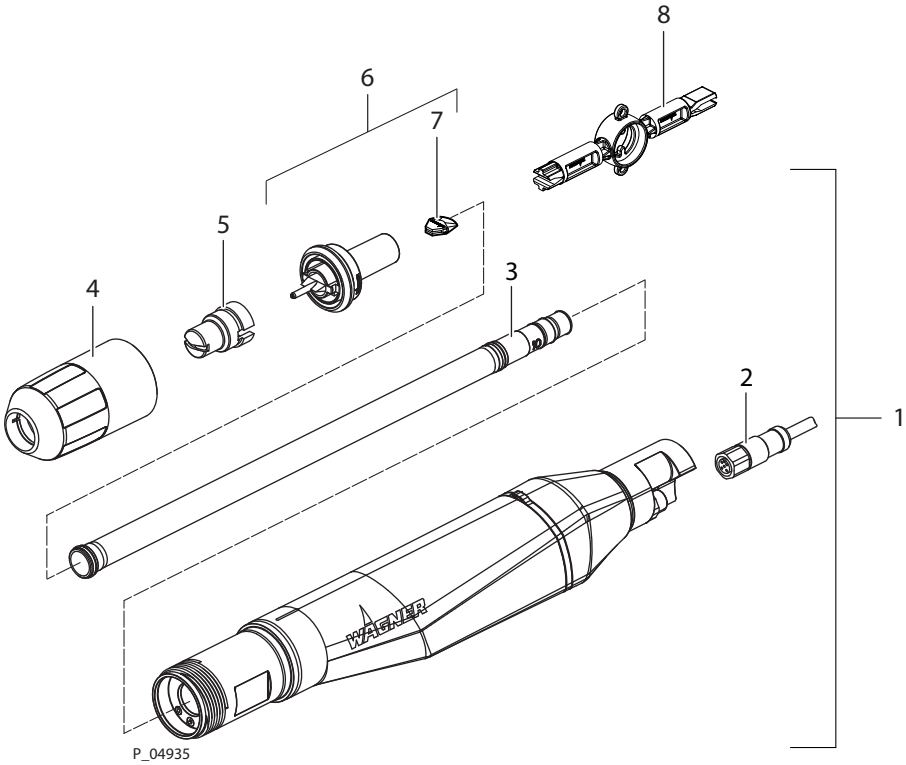

Pos	K	Stk	Order no.	Designation
1		1	2430803	Automatic gun, PEA-X1
2		1	See Accessories [▸▸ 54]	Connection cable, PEA-X1
3	♦	1	2431552	Powder tube, PEA-X1 D10-12, assy.
4		1	2320464	Union nut, X1
5	♦	1	2420243	X1 Flat jet nozzle, F1
6	♦	1	2429073	X1 electrode holder, cpl. ET
7	♦	1	2429695	X1 replacement protective wedge (white)
8	●	1	2324205	Wedge tool, X1

♦ = Wearing parts

● = Special accessories

13.4 AUTOMATIC GUN PEA-X1 WITH ROUND JET NOZZLE

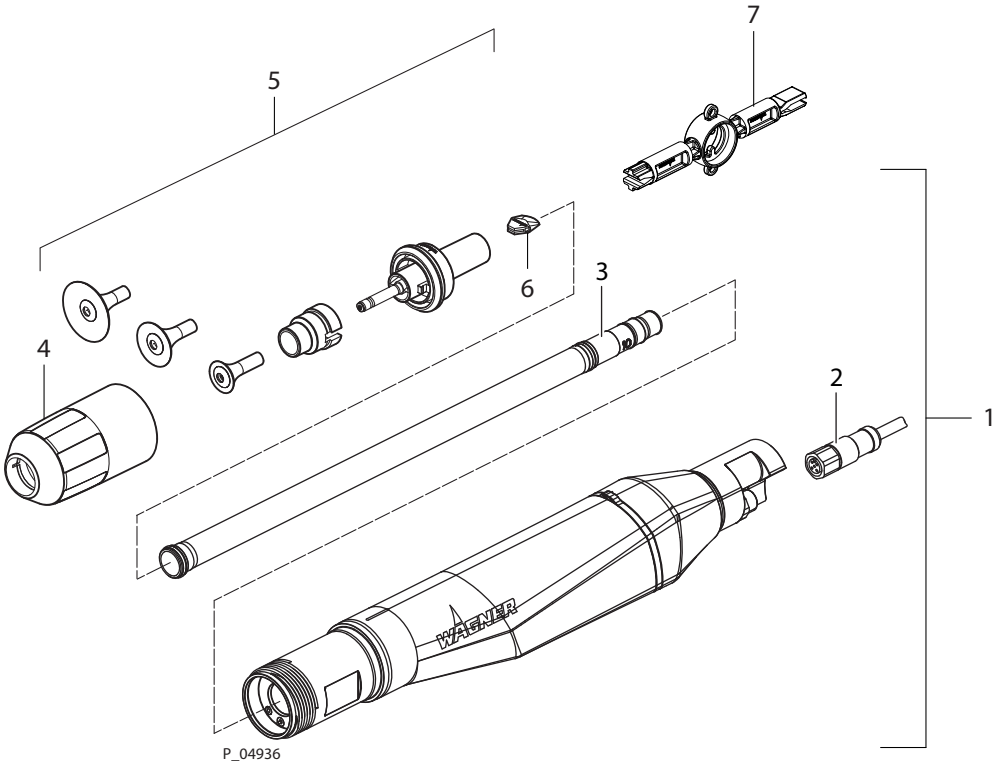

Pos	K	Stk	Order no.	Designation
1		1	2430804	Automatic gun, PEA-X1
2		1	SeeAcces-sories [▸▸ 54]	Connection cable, PEA-X1
3	♦	1	2431552	Powder tube, PEA-X1 D10-12, assy.
4		1	2320464	Union nut, X1
5	♦	1	2322493	Electrode holder, X1 R, with nozzle
6	♦	1	2429695	X1 replacement protective wedge (white)
7	●	1	2324205	Wedge tool, X1

♦ = Wearing parts

● = Special accessories

Note:

The replacement protective wedges (color coding yellow or white) are compatible with each other!

13.5 X1 R ELECTRODE HOLDER

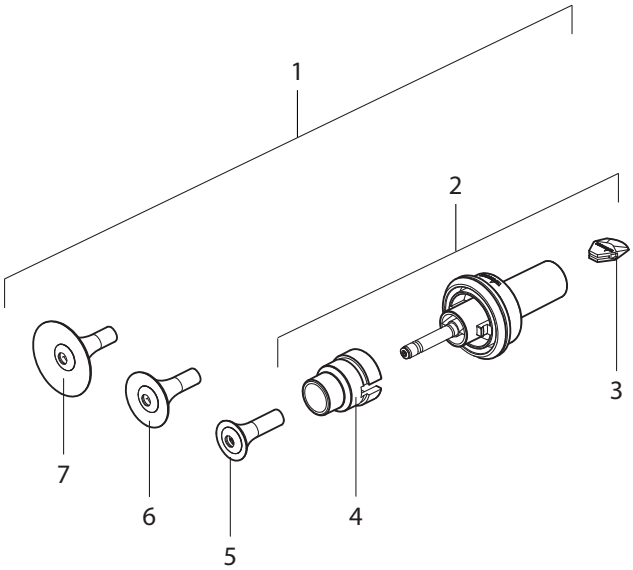

P_01700

Pos	K	Stk	Order no.	Designation
1	♦	1	2322493	Electrode holder, X1 R, with nozzle
2	♦	1	2322490	Electrode holder, X1 R ET
3	♦	1	2429695	X1 replacement protective wedge
4	♦	1	2320503	Deflector cone sleeve, X1
5	♦	1	2321981	Deflector cone, D18, complete
6	♦	1	2321980	Deflector cone, D25, complete
7	♦	1	2321171	Deflector cone, D34, complete

♦ = Wearing parts

13.6 X1 DOUBLE ADAPTER

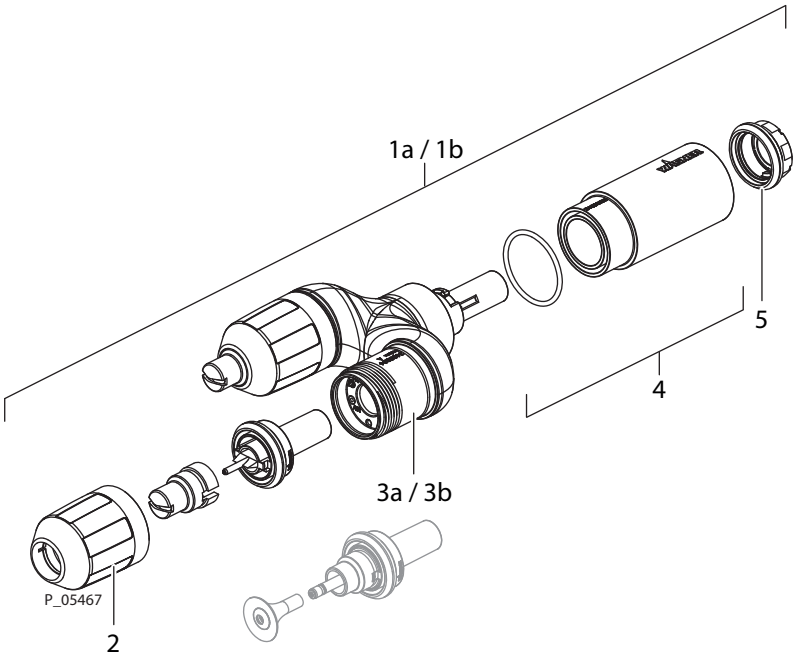

Pos	K	Stk	Order no.	Designation
1a	♦	1	2436638	X1 double adapter
1b	♦	1	2436625	X1 double adapter, HC1
2		1	2428235	Union nut, 55 mm
3a	⋆	1	2443914	Basic device X1, double nozzle (ET)
3b	⋆	1	2443913	Basic device X1, double nozzle HC1 (ET)
4	⋆	1	2443902	Union nut, double nozzles (ET)
5	⋆	1	2443903	Contact ring (ET)

♦ = Wearing parts

⋆ = Only for service

13.7 X1 ANGLE ADAPTER, 0-90°

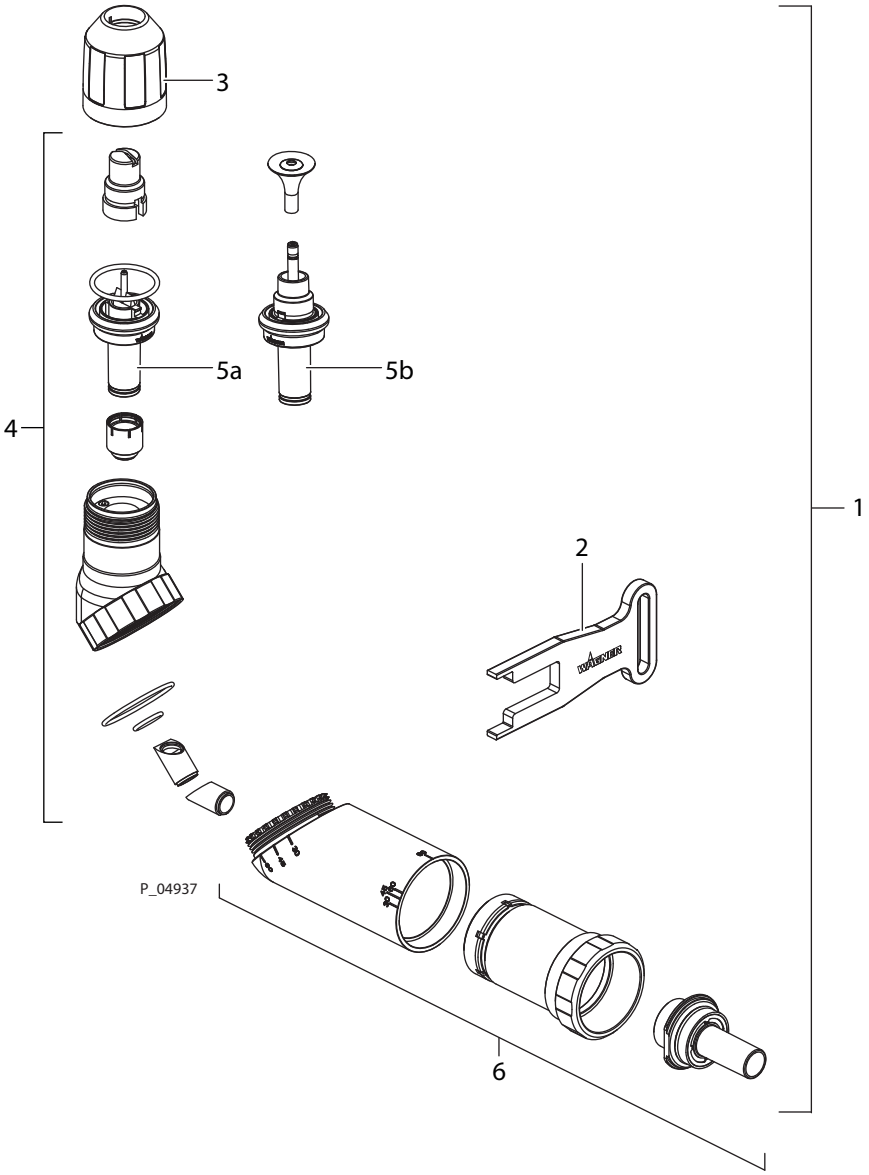

Pos	K	Stk	Order no.	Designation
1		1	2431974	X1 angle adapter, 0-90°
2		1	2431973	Mounting key *
3		1	2431972	Union nut, 55 mm
4	♦	1	2429434	X1 elbow adapter, 0-90° VT-SET
5a	♦	1	2431975	X1 electrode holder, angle adapter 0-90°
5b	♦	1	2441805	X1 R electrode holder, angle adapter 0-90°
6		1	2431969	VT set, gun connection

♦ = Wearing parts

* = The mounting key is included with the angle adapter but can also be ordered separately if needed.

14 DECLARATION OF CONFORMITY

14.1 EU DECLARATION OF CONFORMITY

Herewith we declare that the supplied version of:

PEA-X1

complies with the following guidelines:

2014/34/EU
2006/42/EC
2014/30/EU
2011/65/EU

Applied standards, in particular:

EN ISO 12100: 2010	EN 50177:2009+A1:2012
EN 1953:2013	EN IEC 60079-0:2018
EN ISO 13732-1: 2008	EN 1127-1:2019
EN 14462:2015	EN IEC 61000-6-2:2019
EN 60529: 1991+A1: 2000+A2: 2013	EN IEC 61000-6-4:2019
EN 50050-2:2013	EN IEC 63000:2018

Applied national technical standards and specifications, in particular:

DGUV-I 209-052
TRGS 727

Identification:

CE 0102 Ex II 2 D 2 mJ

PTB 22 ATEX 5001

Declaration of Conformity

The declaration of conformity is enclosed with this product. If needed, further copies can be ordered through your WAGNER dealer by specifying the product name and serial number.

Order number: 2427643

Order number 2444993
Edition 10/2022

Germany
J. Wagner GmbH
Otto-Lilienthal-Strasse 18
Postfach 1120
D-88677 Markdorf
Telephone: +49 (0)7544 5050
Fax: +49 (0)7544 505200
E-mail: ts-powder@wagner-group.com

Switzerland
Wagner International AG
Industriestrasse 22
CH-9450 Altstätten
Telephone: +41 (0)71 757 2211
Fax: +41 (0)71 757 2222

Document number 11450116
Version A

More contact addresses on the internet at:
www.wagner-group.com

Subject to changes without notice