Installation Guide V1.0.0 1.2.51.32.21306-000

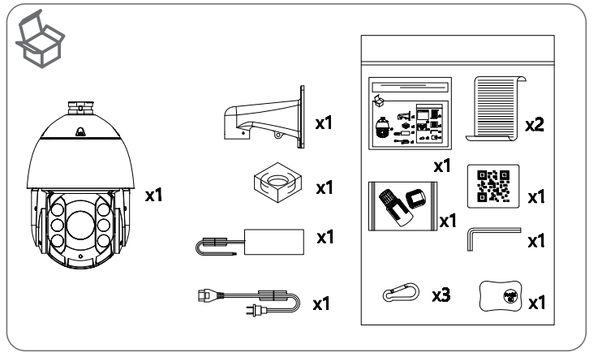

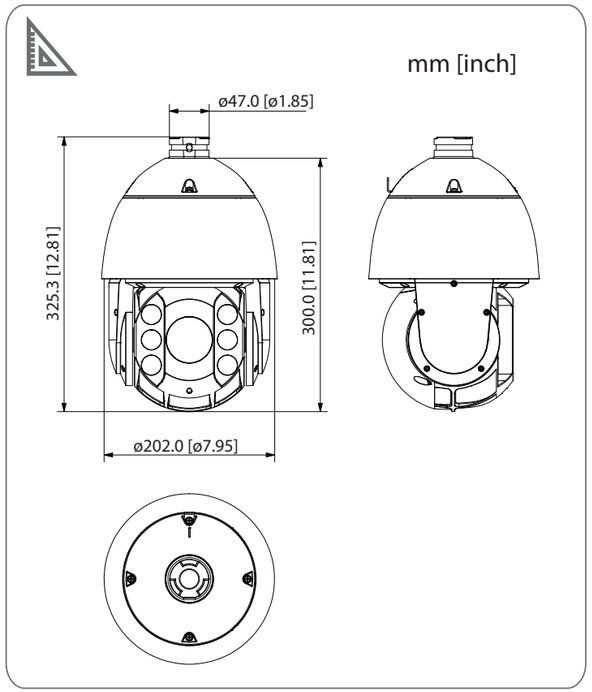

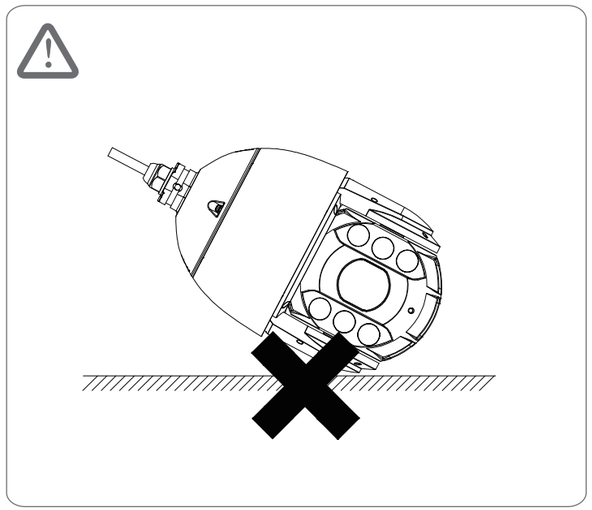

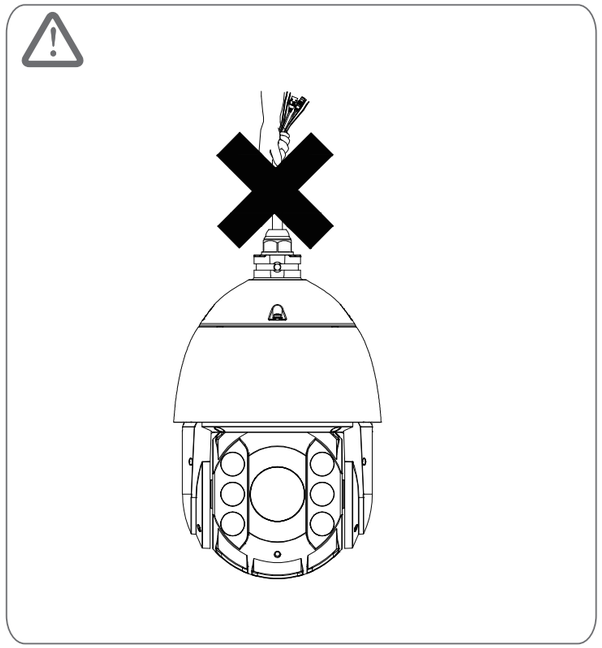

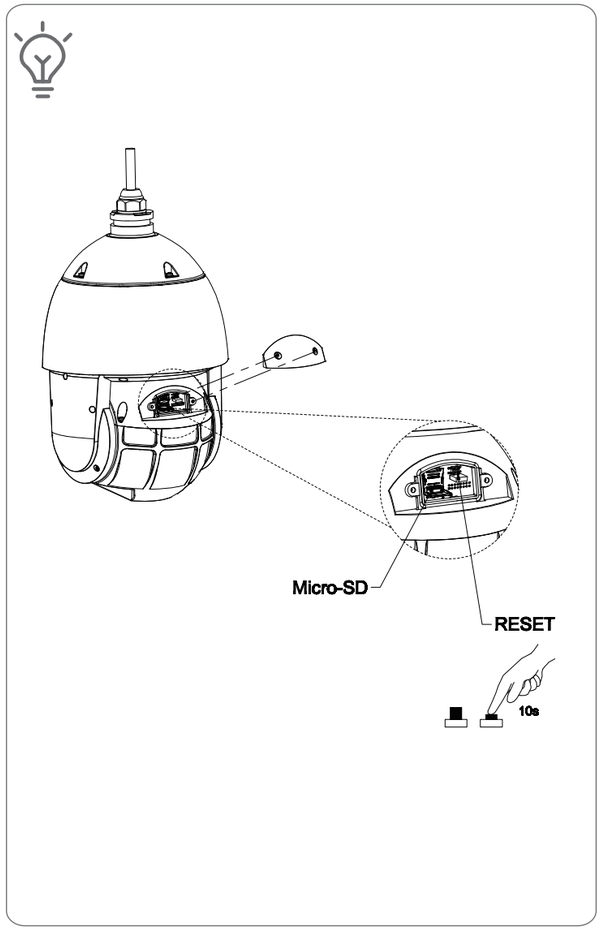

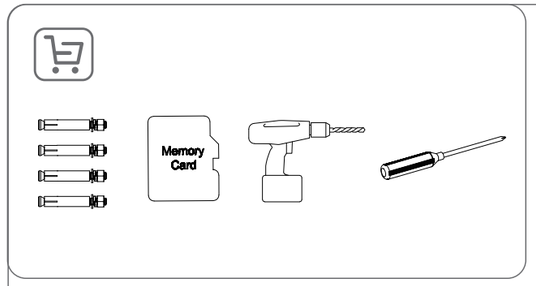

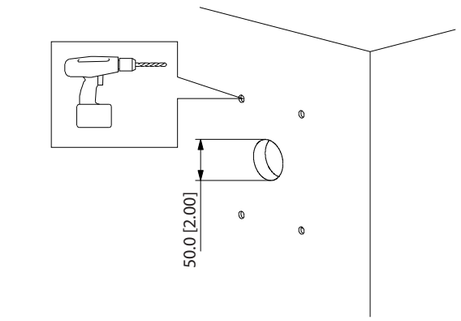

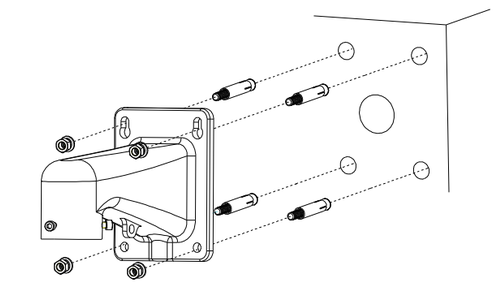

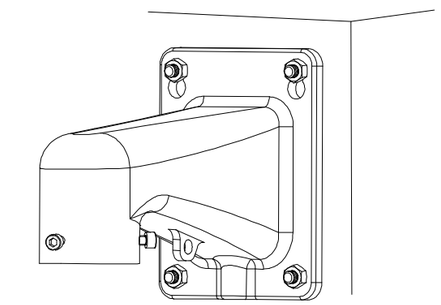

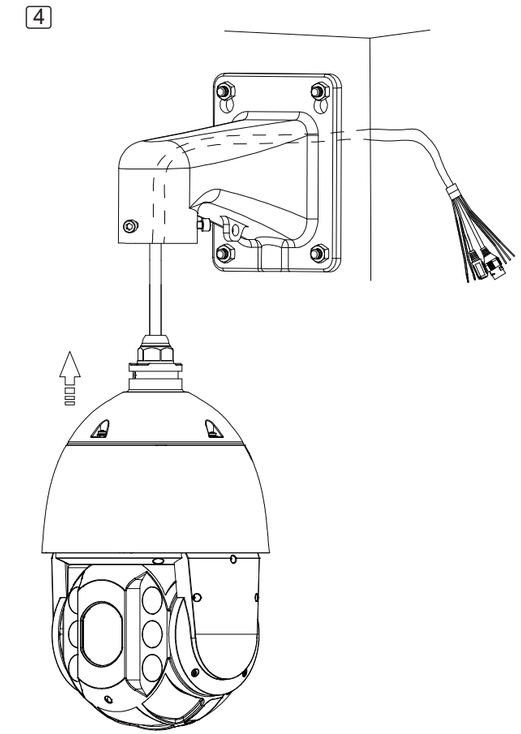

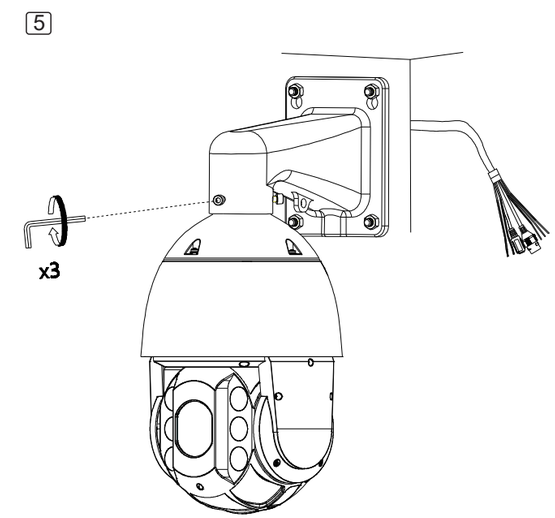

6

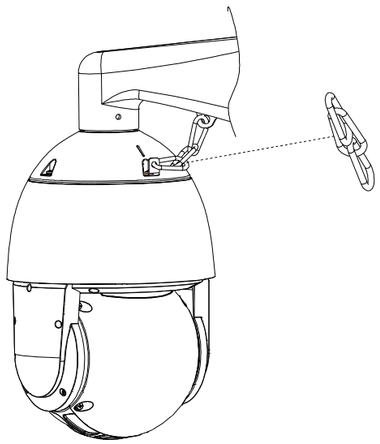

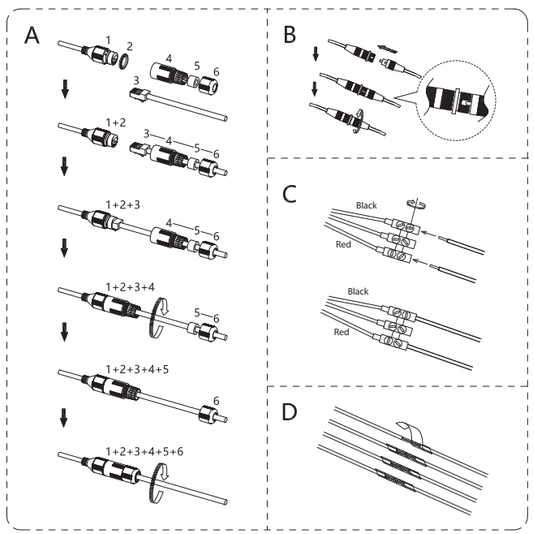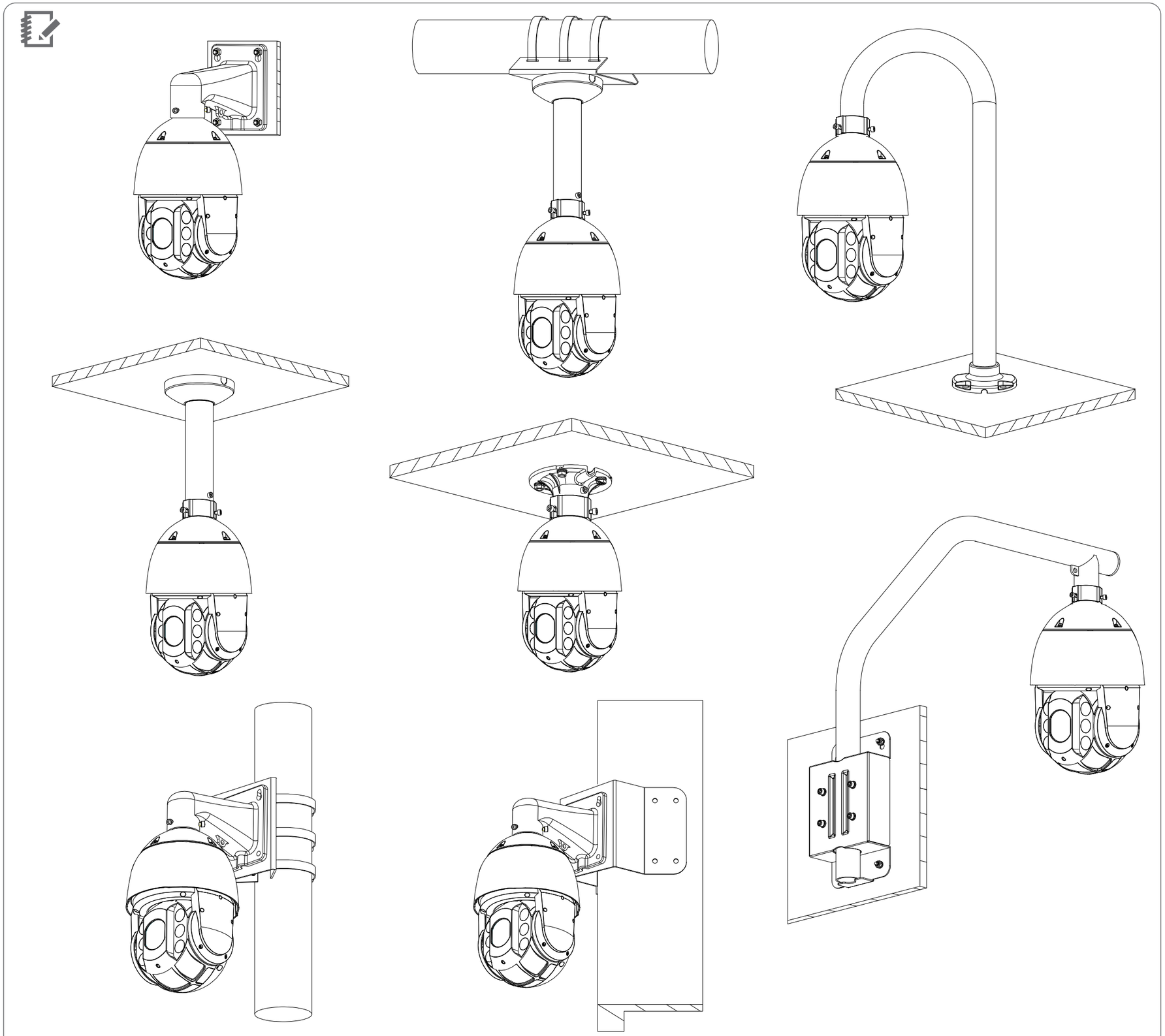
A
1
2
4
5
6
3
1+2
3
4
5
6
1+2+3
4
5
6
1+2+3+4
5
6
1+2+3+4+5
6
1+2+3+4+5+6
B
C
Black
Red
Black
Red
D