FiNFort

THE FINBOLT AUTOMATIC DEADBOLT V1 IN 44MM AND 57MM BACKSET SIZES.
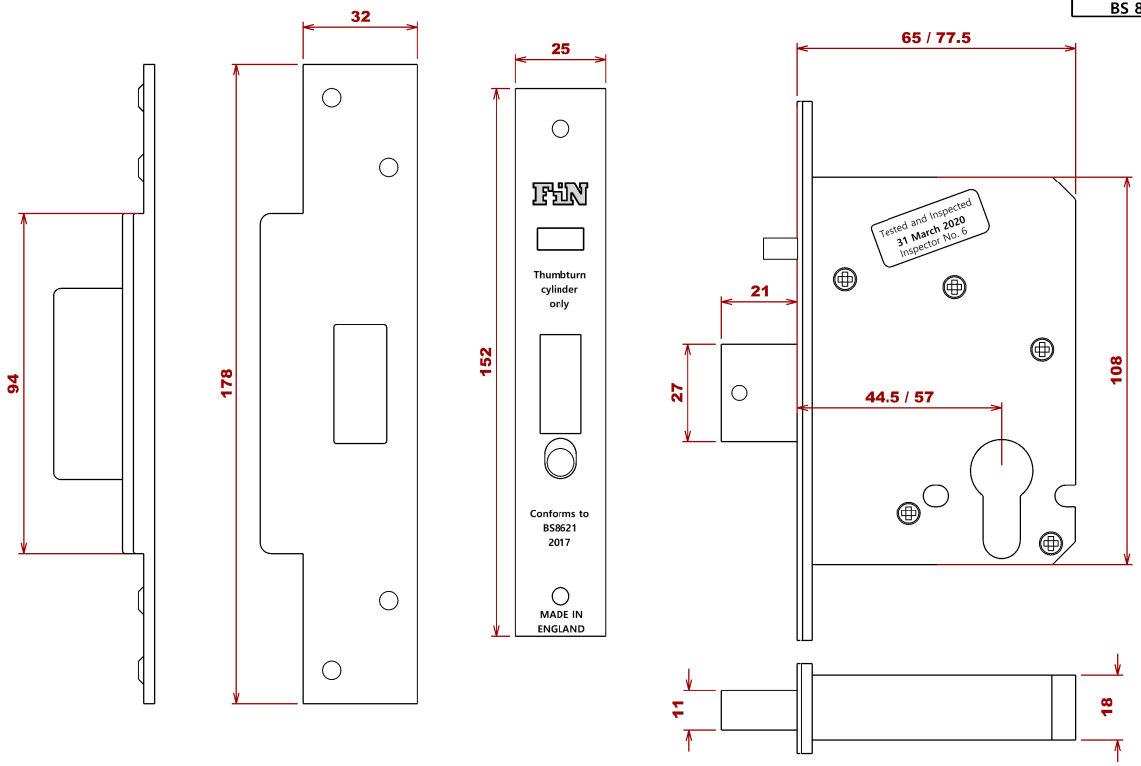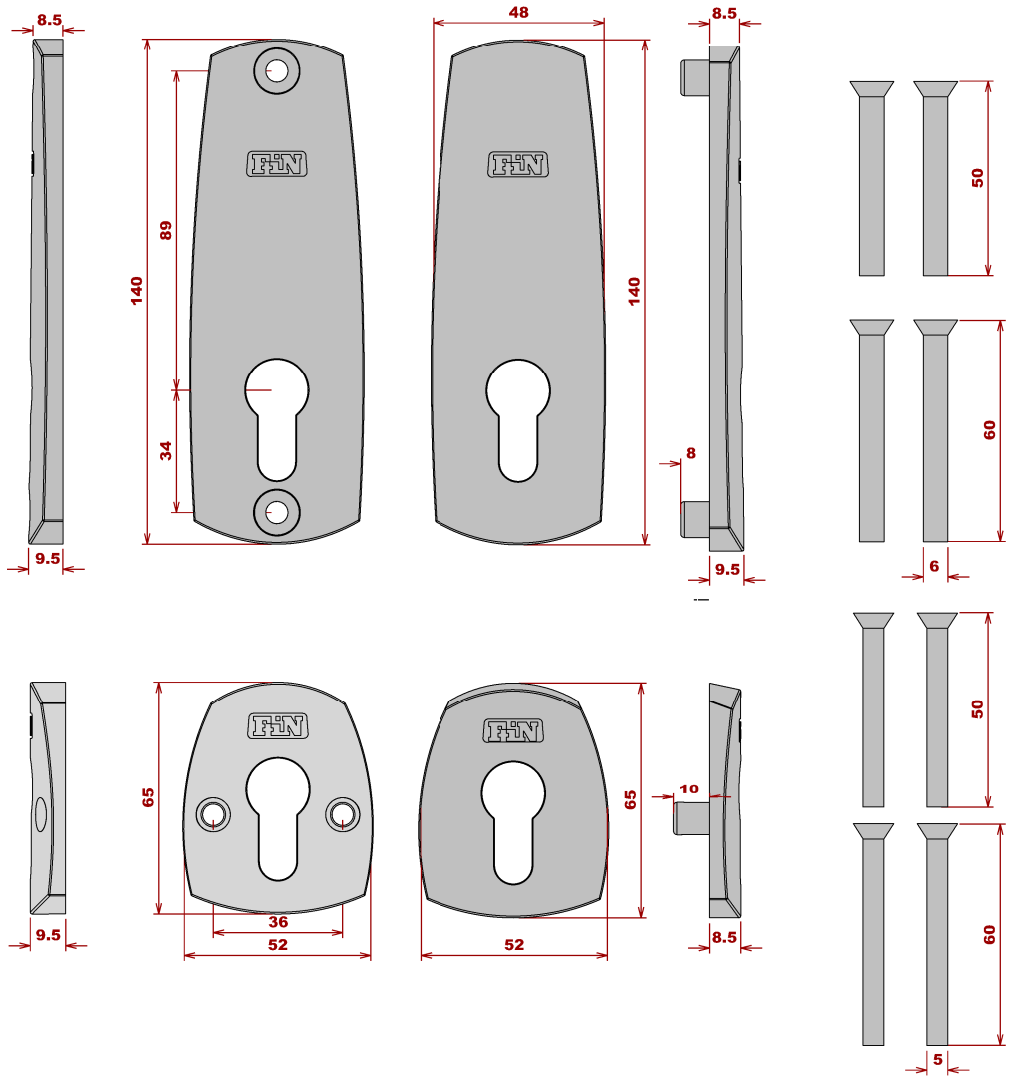
EN 12209:2016						
2	M	4	0	0	F	2	7
Conforms to BS 8621 2017