CAMPANIA
INTERNATIONAL

Coachhouse Urn & Pedestal

Shown in Pietra Nuova

Shown in Pietra Nuova

Shown in Pietra Nuova

Cast Stone

Campania proudly manufactures its cast stone products in the USA using locally sourced materials. All of our cast stone pieces are manufactured using the wet casting technique with a proprietary high density cast stone mix, yielding a PSI strength of approximately 7,500. The mix is comprised primarily of water, sand, stone aggregate and cement. Our cast stone products may qualify for LEED credits as applicable to your project. Cast stone produces a strong and durable product that will weather naturally in an outdoor environment. Simply stated, cast stone is chosen for its beauty and authenticity. Our material is natural, authentic, made in the USA, and 100% recyclable. These planters are often specified for hospitality projects, large scale public space installations, pedestrian and traffic safety, and other custom projects. Although we recommend that you take advantage of the quick turnaround of our stocked product; these shapes, finishes, and/or sizes are not always right for every job. Campania has the capability to produce custom molds and colors in our Pennsburg, PA factory.

Available in a choice of thirteen (13) exclusive natural pigment stains in addition to natural. All of our patinas are hand applied in a multi-step process which produces unique and beautiful surface finishes. Designed to replicate the look of naturally aged materials, the patinas will not prevent the natural aging process that occurs in an outdoor environment. Rather than creating uniform stains, our approach gives our products their unique beauty and appeal.

Material	Item Description	Item #	Outside Dimensions	Base Dimensions	Inside Top Dimensions	Inside Height Dimensions	Approx. Weight	Approx. Soil Capacity
Cast Stone	Coachhouse Urn	P-595	26" Diam. x 17.25"H	13"L X 13"W	20" Diam.	8"H	144 lbs	1 cu ft.
Material	**Item Description**	**Item #**	**Outside Dimensions**	**Base Dimensions**	**Top Usable Surface Area**	**Drainage Hole**	**Approx. Weight**	**Approx. Soil Capacity**
Cast Stone	Coachhouse Pedestal	PD-191	16.75"L x 16.75"W x 30.5"H	16.75"L X 16.75"W	14" Sq.	4" Diam.	411 lbs	n/a

Note: *Each planter is equipped with drainage holes.*

AVAILABLE COLORS

Please note: *Actual colors may vary slightly from those depicted below. Color samples are available upon request. Call 215-541-4627 for more info.*

(NA) Natural | (AL) Aged Limestone | (AS) Alpine Stone | (BR) Brownstone | (CB) Copper Bronze | (EM) English Moss | (FN) Ferro Rustic Nuovo | (FL) French Limestone | (GS) Greystone | (LA) Lead Antique | (NN) Nero Nuovo | (PN) Pietra Nuova | (TR) Travertine | (VE) Verde

SHOP NOW

rev 5/8/2020

Coachhouse Urn & Pedestal

Isometric View

Top View

P-595

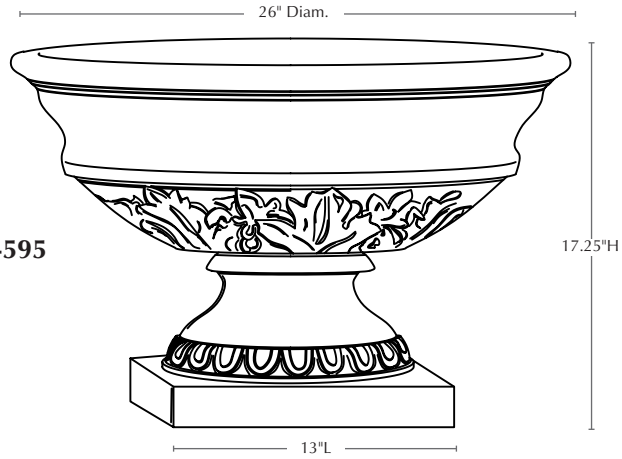

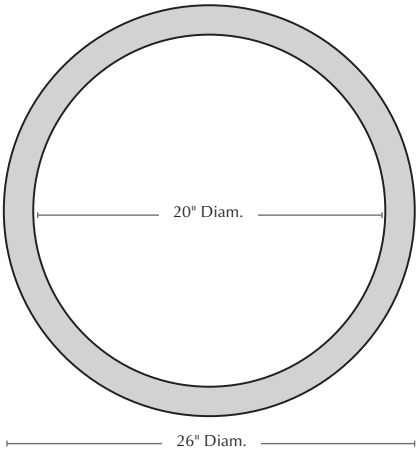

PD-191

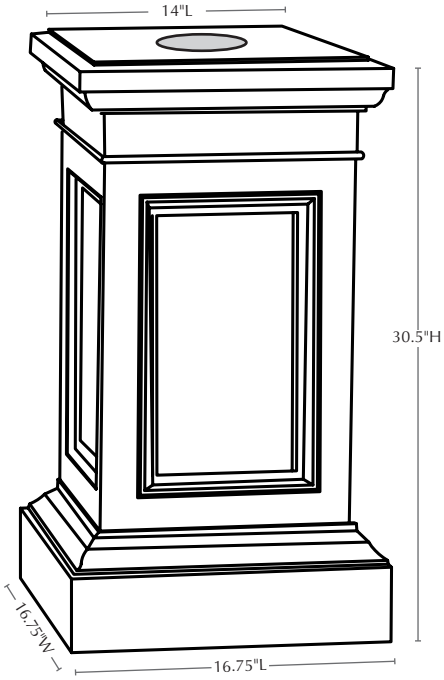

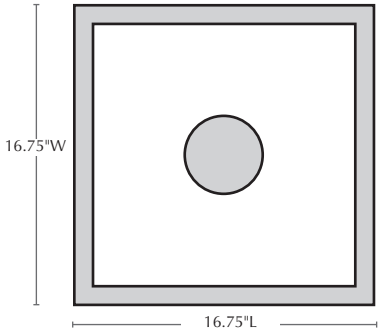

Materials: cement, sand, stone aggregate and water

Care & Maintenance/Outdoor Planting Instructions: Our cast stone planters are equipped with pre-installed drainage holes to allow for drainage. The drain holes must be kept clear to maintain the longevity of your planter, especially in climates that undergo freeze thaw cycles in the winter. Whenever possible, we recommend raising the planter off of the ground to prevent the planter from freezing to the surface below; Covering the drain holes with a mesh screen or equivalent to keep debris from clogging the openings; Filling the bottom of the planter with non-porous drainage material; Filling the remainder of the planter with a well-draining soil mix that will not retain water; and lastly, covering the soil with decorative mulch or pine bark to the top rim of the planter to discourage water from pooling on the surface.

Touch-up & Patch Kits: Available upon request by calling 800-975-4022.

Cleaning Instructions: Campania's cast stone planters can be cleaned with diluted vinegar and water or with any commercially available mild detergent. Use a soft cloth, sponge, or brush. Do not pressure wash, apply corrosive cleaners or clean with anything abrasive. Note that it may take several cycles of wiping and drying before the planter is completely clean. Cast stone contains salts that may effloresce over time. You will notice a fine white powdery coating on the surface of the cast stone if the efflorescence is present in your product. If you wish to remove the salt deposits, Campania can recommend an appropriate an efflorescence cleaner. Contact us at 800-975-4022 for details.

SHOP NOW