PLASTEC VENTILATION, INC.

www.plastecvent.net Phone: 941-751-7596 Fax: 941-751-7598

Submittal Data and Specifications

JET Series Wall Mounting Bracket

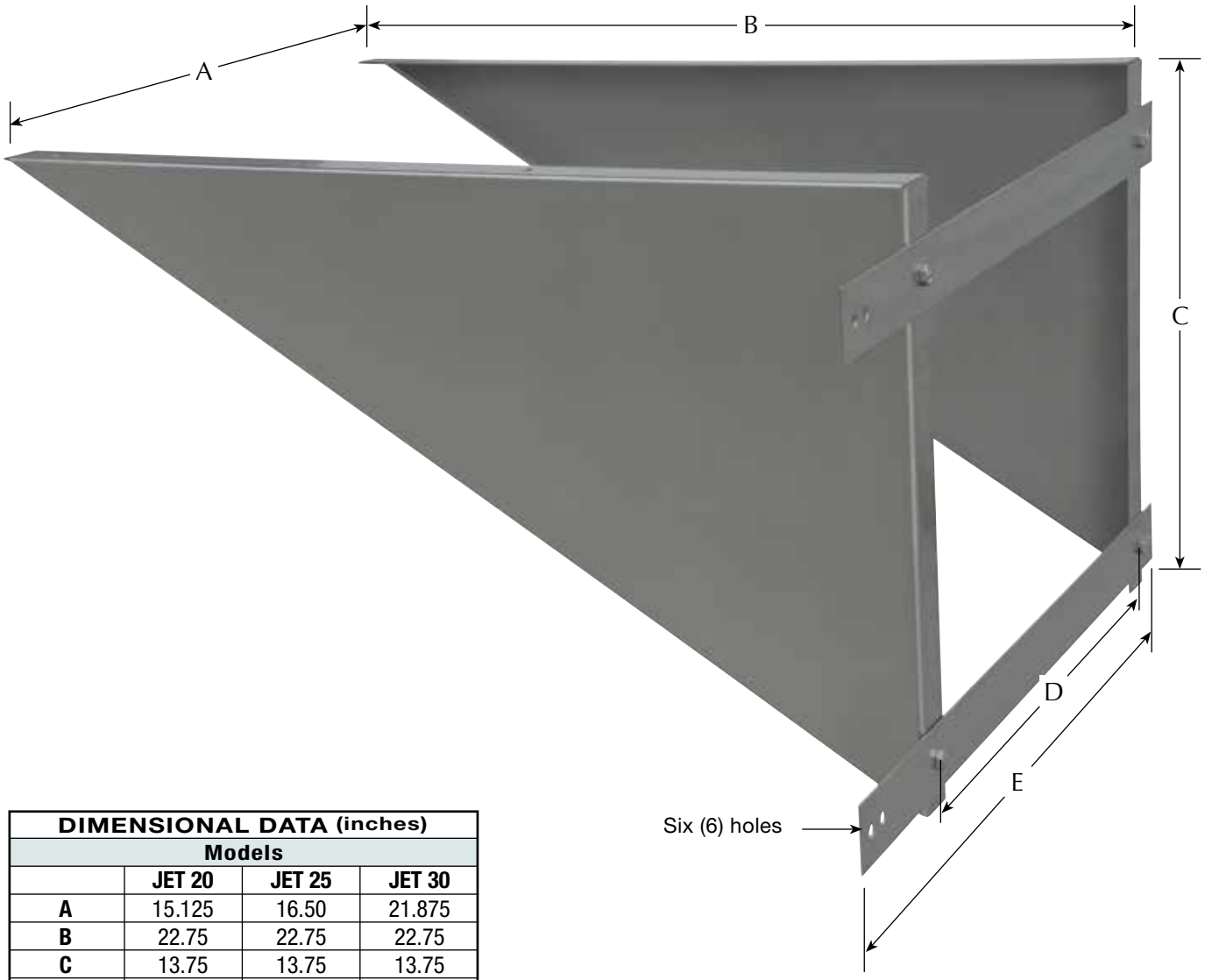

DIMENSIONAL DATA (inches)			
	Models		
	JET 20	JET 25	JET 30
A	15.125	16.50	21.875
B	22.75	22.75	22.75
C	13.75	13.75	13.75
D	14.50	18.60	19.75
E	20.00	20.00	25.125