# ZAH-393S Shock Reduction Air Hammer With Special Chassis Chisel Sets

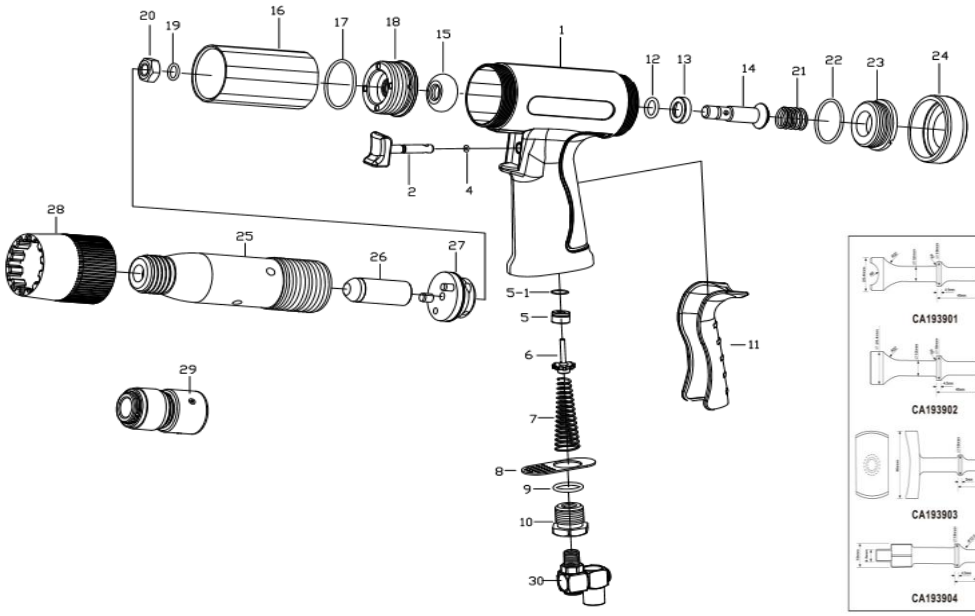


## ACCESSORIES

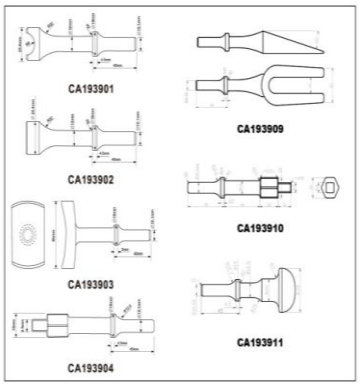


## TECHNICAL DATA

| | |
|---|---|
| Chisel Shank Opening inch(mm) | 0.401 ( 10.2 ) |
| Bore Diameter inch(mm) | 3/4" ( 19) |
| Stroke Length inch(mm) | 2-5/8(66) |
| Operating Air Pressure PSI(bar) | 6.2(90) |
| Blows per Minute @ 90 Psig B.P.M | 3,000 |
| Avg. Air Consumption @ 90 Psig cfm(1/min) | 4.95(140) |
| Tool Weight lbs(kgs) | 4(1.8) |
| Min. Hose Size inch(mm) | 3/8(10) |
| Air Inlet Size inch-NPT/PT | 1/4" NPTF |
| Vibration $m/s^2$ | 10 |

## PARTS LIST

| Index # | Part # | Description | Q'ty | Index # | Part # | Description | Q'ty |
|---|---|---|---|---|---|---|---|
| 1 | 393101B | Handle | 1 | 21 | 315608 | Spring | 1 |
| 2 | 293611 | Valve Button | 1 | 22 | OR3034 | O-Ring | 1 |
| *4. | OR0407 | O-Ring | 1 | 23 | 293104 | End Cap | 1 |
| *5. | 293222 | Value Seat | 1 | 24 | 293103 | Rubber Cap | 1 |
| *5-1. | OR1316 | O-Ring | 1 | 25 | 193401 | Cylinder | 1 |
| 6 | 293203 | Actuating Value Asss'y | 1 | 26 | 193402 | Piston | 1 |
| 7 | 293204 | Spring | 1 | 27 | 193300 | Valve Ass'y | 1 |
| 8 | 442207 | Diffusion Plate | 1 | 28 | 193413 | Exhaust Deflector | 1 |
| 9 | OR1621 | O-Ring | 1 | | | | |
| 10 | 280221 | Air Inlet Bushing (18T) | 1 | | **Accessories** | | |
| 11 | 393102 | Handle Sleeve | 1 | 29 | 192914 | Quick Change Retainer | 1 |
| *12 | OR1217 | O-Ring | 1 | 30 | 922A18/19 | 1/4" Swivel Joint | 1 |
| 13 | 193429 | Value Seat | 1 | * | CA193903 | Hammer Punch | 1 |
| 14 | 193418 | Air Inlet Tube | 1 | * | CA193909 | Hammer Punch | 1 |
| 15 | 193426 | Bumper | 1 | * | CA193901 | Hammer Punch | 1 |
| 16 | 193415 | Inner Housing | 1 | * | CA193902 | Hammer Punch | 1 |
| 17 | OR3741 | O-Ring | 1 | * | CA193904 | Hammer Punch | 1 |
| 18 | 193416 | Head-Inner Housing | 1 | OPT. | CA193910 | Hammer Punch | 1 |
| 19 | OR1014 | O-Ring | 1 | OPT. | CA193911 | Hammer Punch | 1 |
| 20 | HN1013 | Lock Nut | 1 | | | | |

***FOR FREQUENCY REPLACEMENT PARTS**

**DATE : 12/01/2014**