ANGELWING DESIGNS

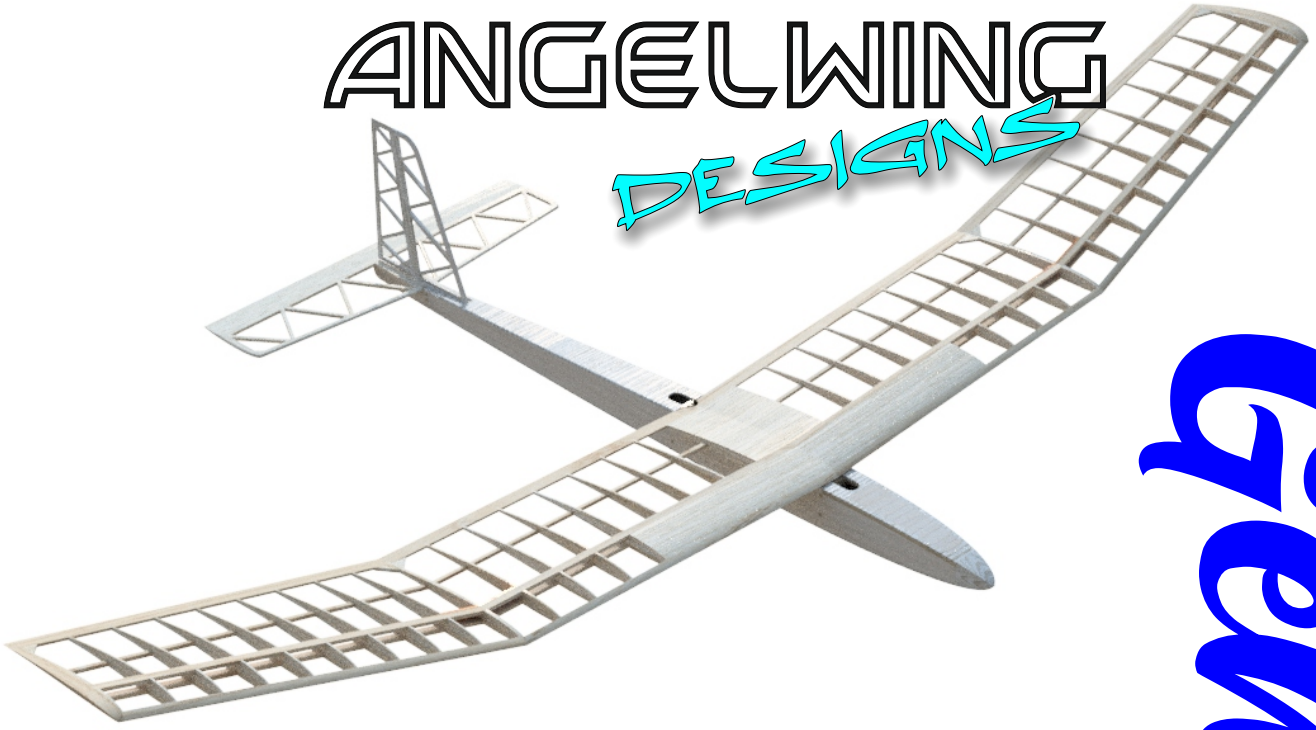

Gentle Lady

Our Gentile Lady has been designed to capture the spirit of the Carl Goldberg Gentle Lady. Designed as a light wind glider / thermal soarer that can be flown on the slope in a near still day, or using our own Micro Bungee system for flat field flying, and sniffing out a summer thermal.

The model is aimed at relaxed flying and easy building, as such it makes a great first model to build and can even been used for primary training. We have used a modified AG25 wing section rather than the original flat bottom wing section to give better overall performance and thermal hunting properties.

This set of instructions is aimed at people who have built before. But don't worry, if this is your first build please head over to Youtube and visit our good friend Nick Chitty flying.

Nick is producing a detailed step by step series of build videos. Please note some small part changes between Nicks build and the kits.

Suggested Electronics

2 x Kingmax CLS0411H or EMAX ES9051servos
1 x 2S 350mah GNB Lipo with Micro BEC
1 x 4-6 channel Micro Receiver

Please note that this is not a toy. It is the builder / operator of the model aircraft who remains responsible for the structural integrity and safe operation of the model aircraft. Please follow all legal requirements for your country

Nick Chitty Flying

@NickChittyFlying · 4.72K subscribers · 326 videos

The home of anything to do with building and flying aircraft.

Subscribed

YouTube

Where possible throughout the construction we recommend using a water based wood glue. PVA, Aliphatic resin, Superphatic or Laser Cut wood glue. There is however no reason an experienced model builder cannot use CA adhesive or any other glue they wish to use.

In areas we would use something other than a wood glue this will be noted.

So lets start somewhere :

The noseblock is made from 8 laminations of 2.5mm Balsa
Use your glue sparingly as glue is always more difficult to sand than the Balsa wood.
Its really important that the flat back sides are correctly aligned. Use tape or a clamp to hold the laminations together while the glue dries.

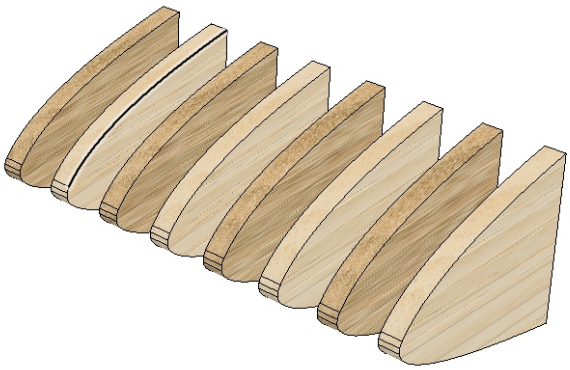

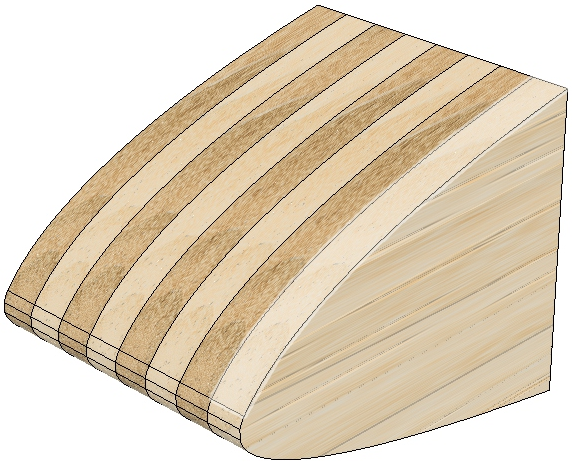

While were getting parts prepared it makes sense to prepare the 2 wing dowel assemblies
Each of these being made from a length of 5mm carbon or plastic dowel and 2 Poplar plywood discs.
Note that each dowel assembly uses 2 different size discs. This is one of the few parts where wood glue isn't the best choice as it does not bond to the carbon / plastic dowel. CA (Superglue) or a 2 part epoxy works best

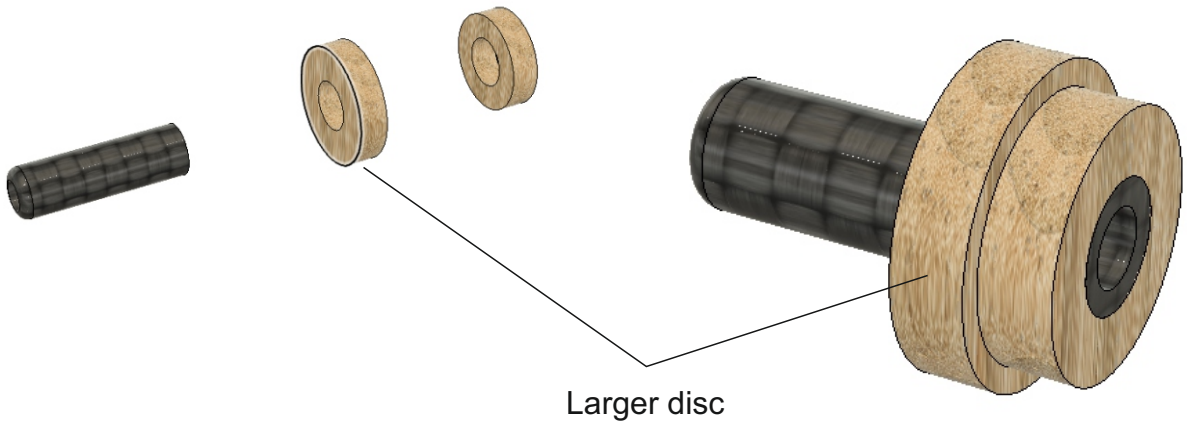

The plan has to be protected. We found that a standard supermarket disposable Veggie bag is just the right size when sliced off at the bottom then split down one seam. Secure the bag to the plan with 4 small strips of masking tape or similar

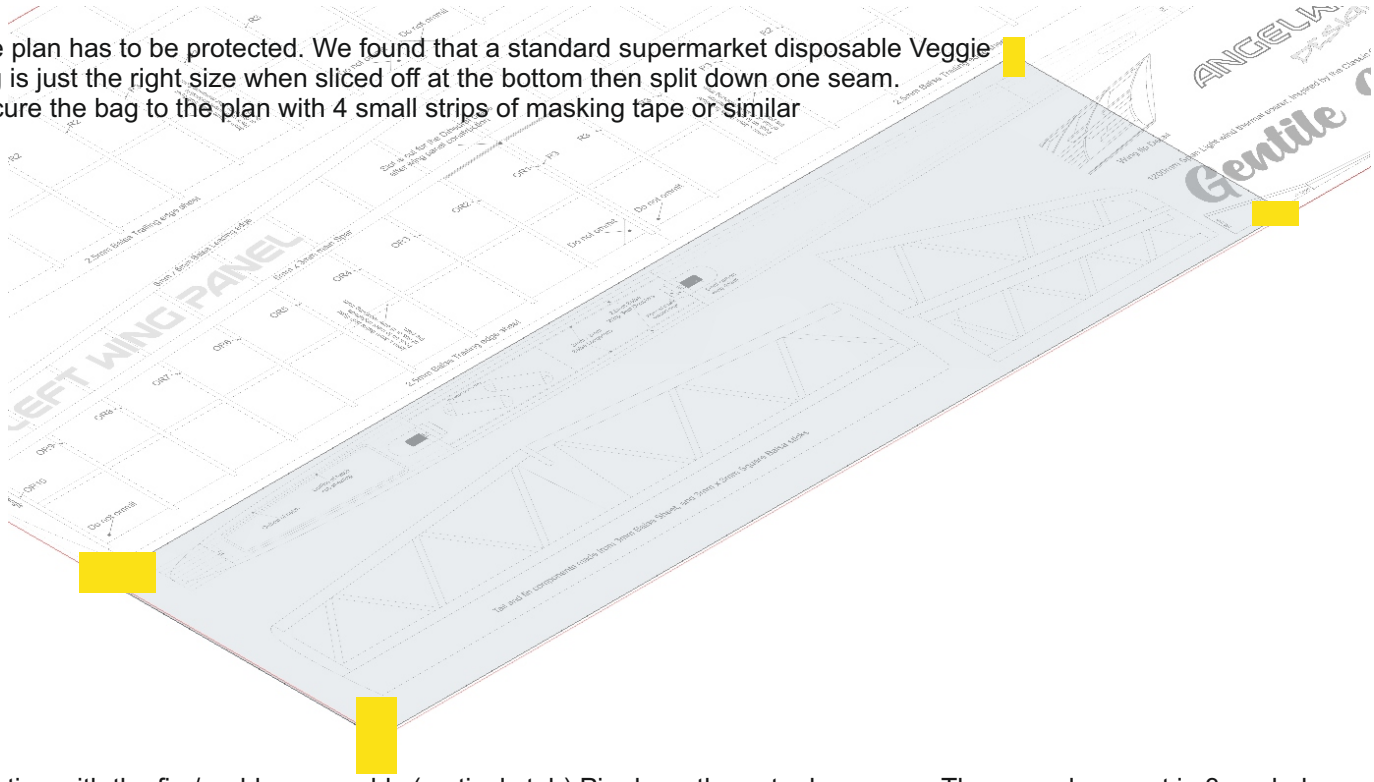

Starting with the fin / rudder assembly (vertical stab) Pin down the outer longerons. These are laser cut in 3mm balsa. You can lightly sand the laser scorch from the inside edges of all the parts if you want that pure balsa look. We don't find that the laser scorch effects the glue strength in any way so this is personal choice. 240 or 320 grit paper is ideal should you wish to do so.

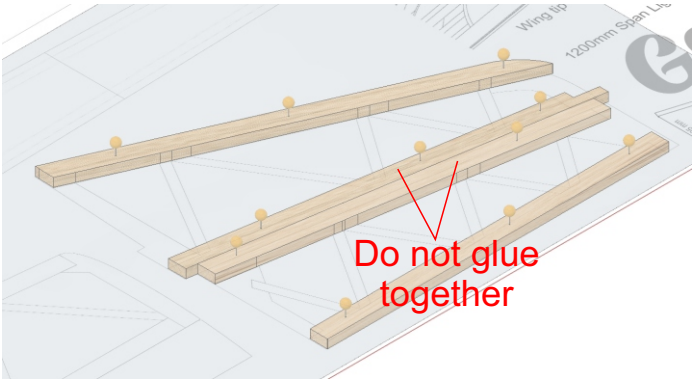

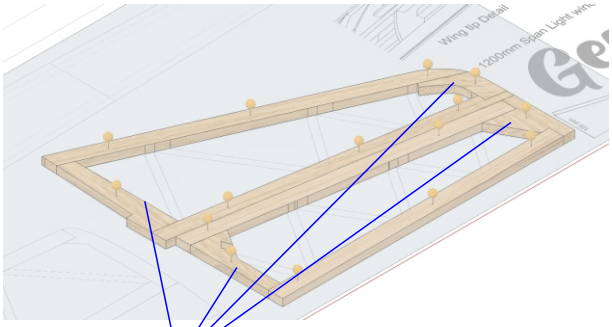

Add the remaining laser cut 3mm balsa fin / rudder components. Adjust the longerons if required to close up any gaps

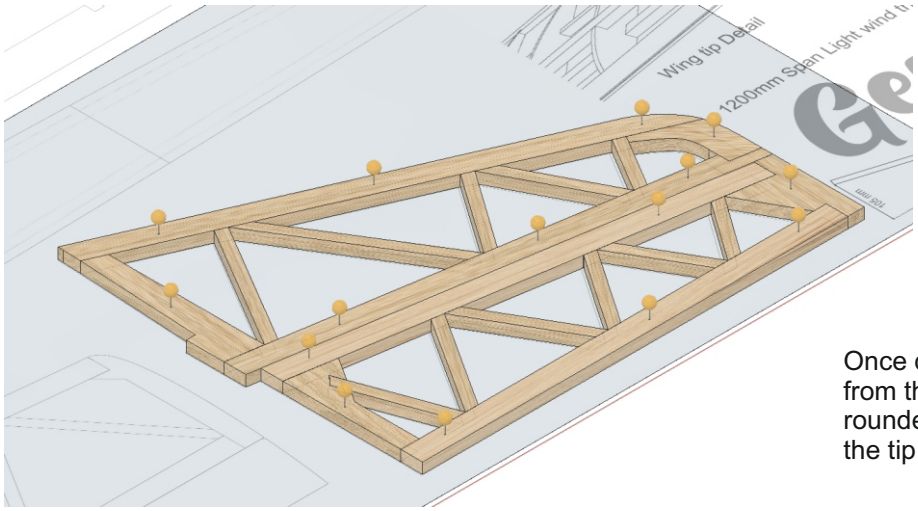

The cross bracing is cut from 3mm x 3mm square balsa. We suggested cutting very slightly oversized and then sanding with a block or bench sander to get an exact fit. Remember the strength is in the joint not the glue. Excess glue = excess weight

Fin

Once dry the Fin and rudder can be removed from the plan. The Fin should have a nice rounded edge sanded onto the front and across the tip of the fin

Fin Rudder

As the components are only 3mm thick we recommend a simple tape hinge using our hinge tape after covering. This is a very simple and reliable way of hinging for lightweight models such as this
A chamfer should be applied to the fins rear edge and rudder front edge to allow for free movement

The tail (Horizontal stab) is built in the same manner as the fin / rudder. Again the outer frame, tips and centre are laser cut from 3mm Balsa. The elevator is just 3mm sheet balsa. We pin the Elevator to the plan but DO NOT glue it to the tail assembly. The reason for pinning this to the plan is so it can be used asa buffer for the tailplanes trailing edge to butt up against during the build

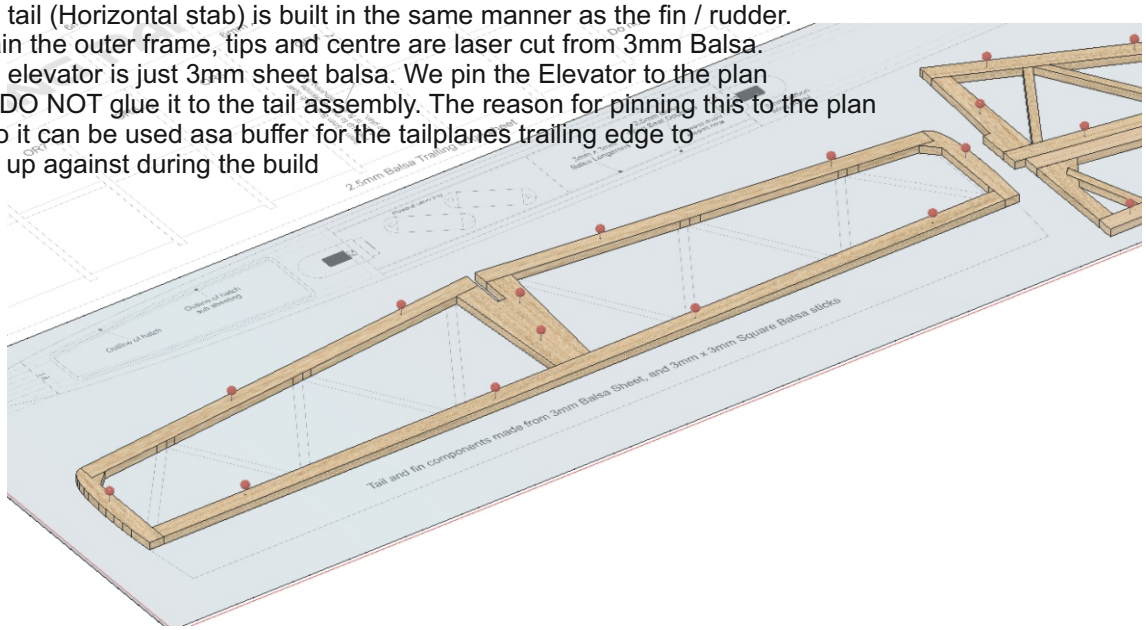

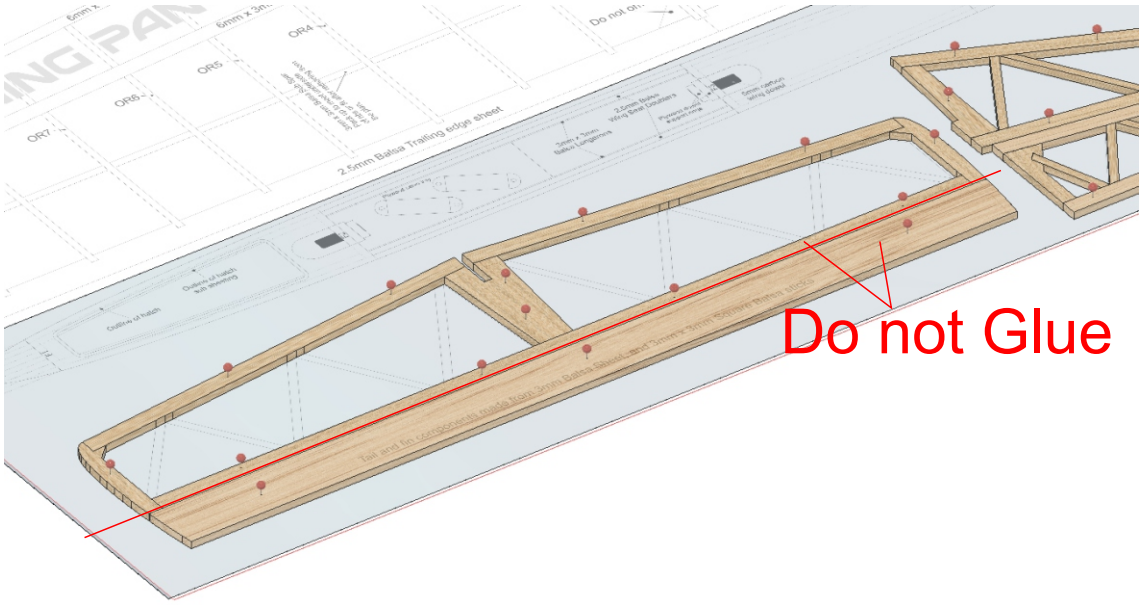

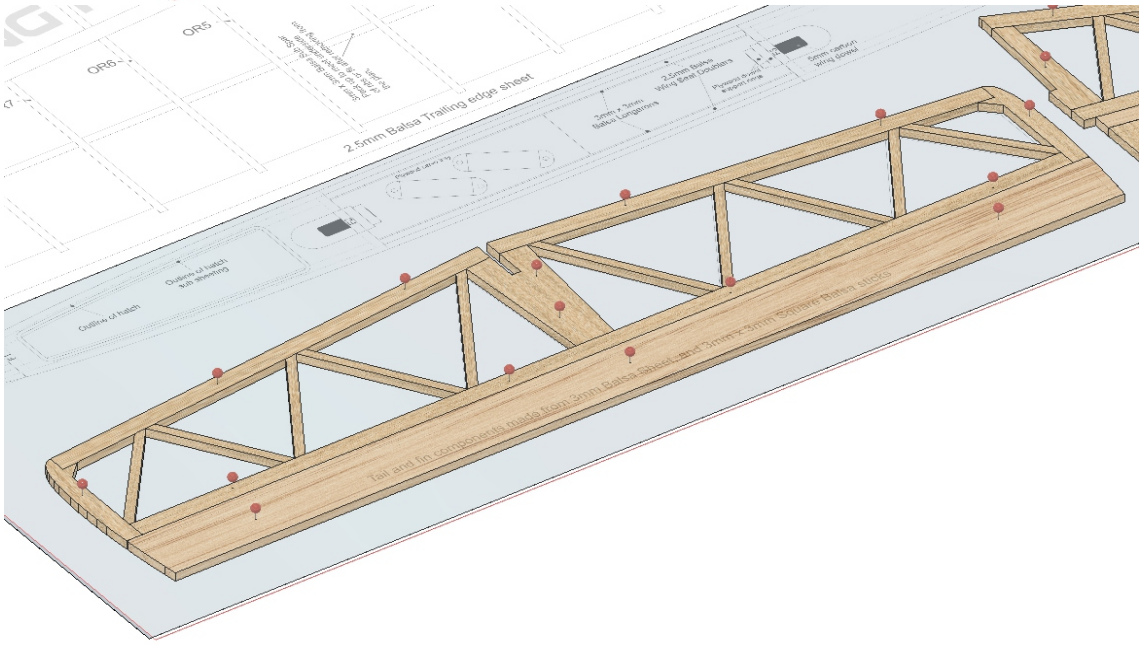

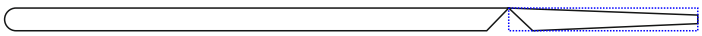

Round the tailplanes tips and leading edge. Sand a Chamfer on the trailing edge

The elevator should be thinned at the rear edge (trailing edge) to around 1.5mm thick.
As per the tailplane and fin / rudder a chamfer needs to be sanded or cut on the leading edge to allow hinging.

The Wing. The wing is really easy to build thanks in part to the notched trailing edge. Its really a good idea to pop all the main ribs out of the balsa sheets first and sand off any nibs and also the slight scorch of the laser. It looks so much nicer when finished if you take time to do this. You should also check the fit of the spars into the slots. under some circumstances you may wish to sand the spar slots a tiny bit deeper using a small file

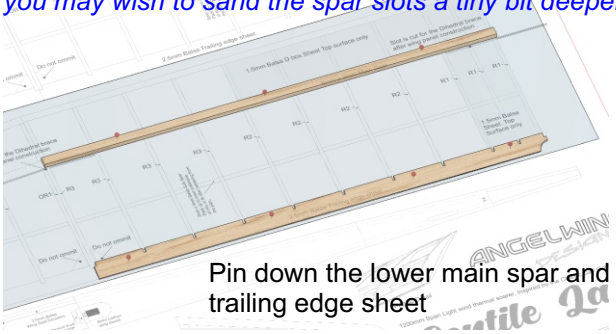

Pin down the lower main spar and trailing edge sheet

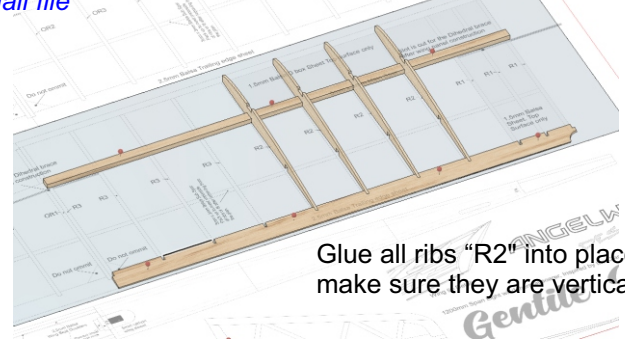

Glue all ribs “R2" into place make sure they are vertical

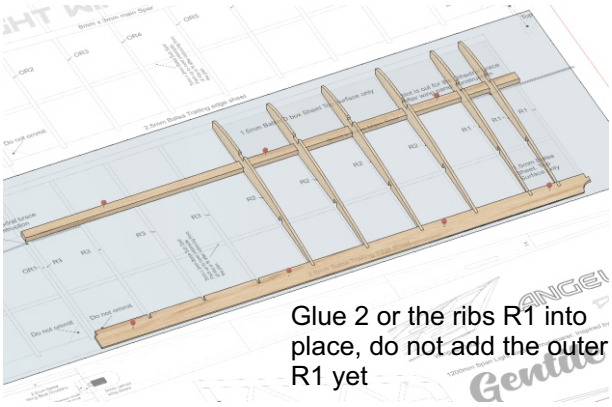

Glue 2 or the ribs R1 into place, do not add the outer R1 yet

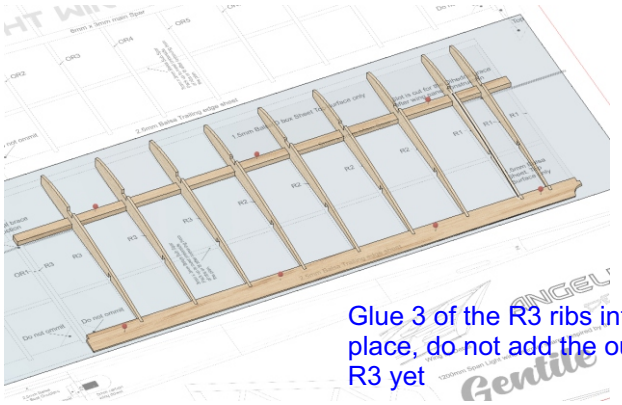

Glue 3 of the R3 ribs into place, do not add the outer R3 yet

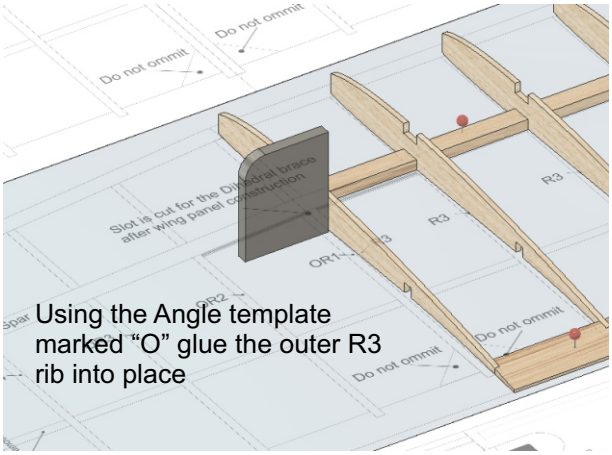

Using the Angle template marked “O” glue the outer R3 rib into place

Using the Angle template marked “I” glue the outer R1 rib into place

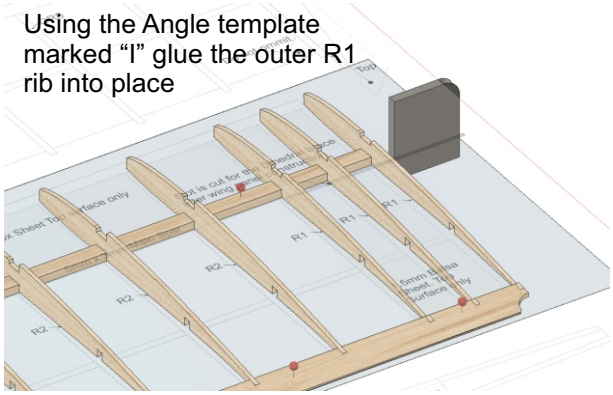

Stands proud where indicated ○

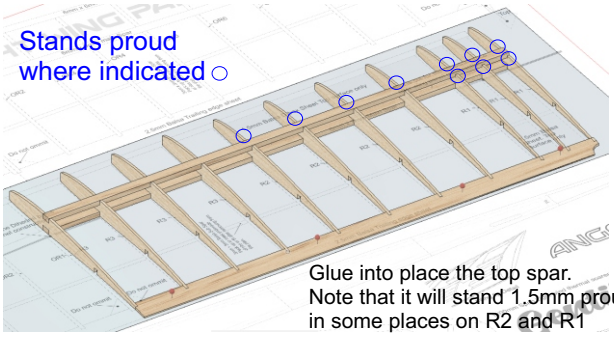

Glue into place the top spar. Note that it will stand 1.5mm proud in some places on R2 and R1

Add the 6mm x 6mm Balsa Leading edge

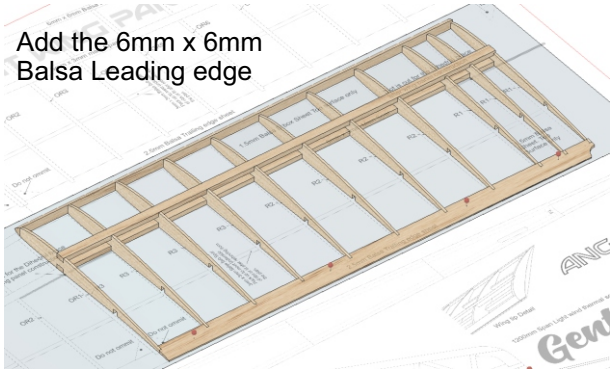

Glue the 1.5mm Balsa D box sheet into place. You may need to trim for perfect fut

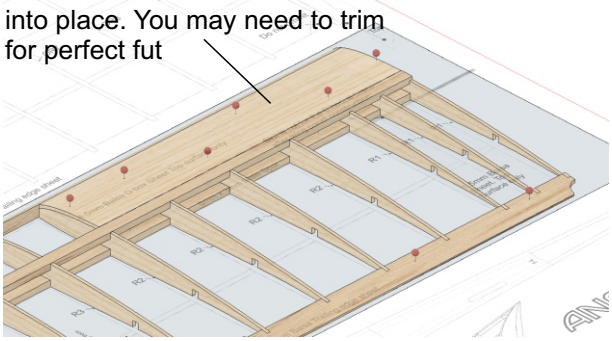

Glue the centre 1.5mm Balsa sheet into place. Trim to fit

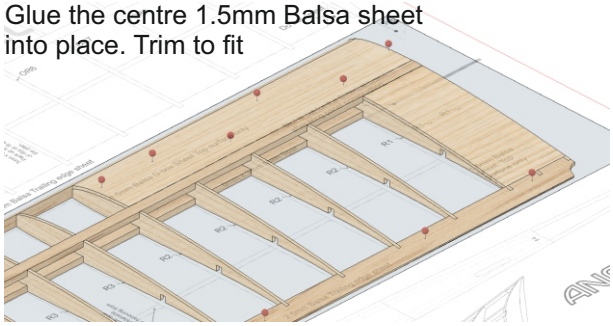

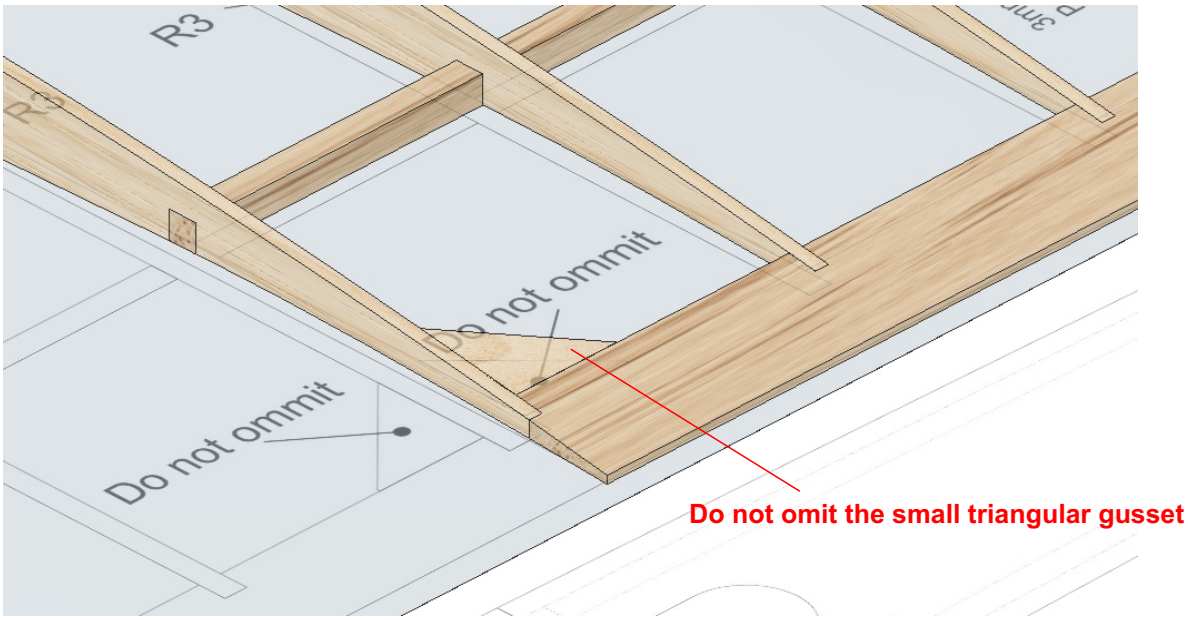

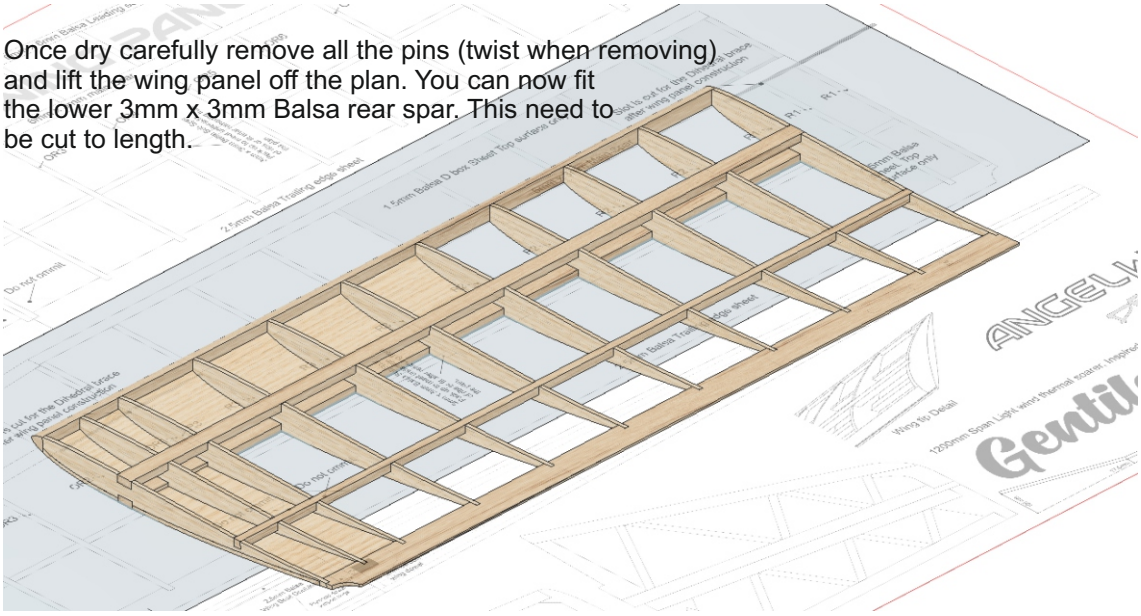

Once dry carefully remove all the pins (twist when removing) and lift the wing panel off the plan. You can now fit the lower 3mm x 3mm Balsa rear spar. This need to be cut to length.

The leading edge and trailing edges need to be sanded to follow the contours of the wing ribs.
A razor plane helps make short work of this but sandpaper glued to a wooden block will work well if you go slowly. Patience here makes a much nicer finished wing

Okay time to make the opposite centre wing panel. Don't make another of the same side. Its so easy to get distracted and fall into this trap. You can even resort to taping a sheet of paper in a couple of places to the plan over the panel you have just built. This may sound like an obvious thing to say but so many of us have built 2 left hand or 2 right hand panels over the years.

Most of the outer wing panel construction remains the same as the main panels. Again ensure you build a left and right hand pair

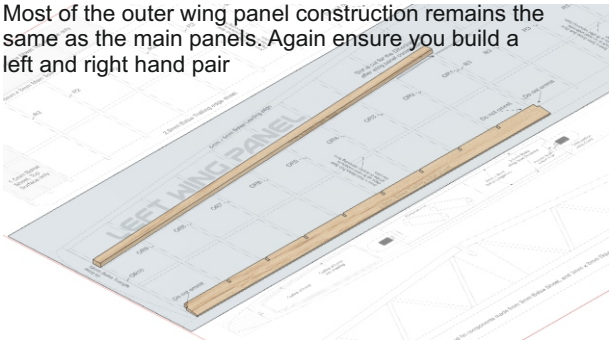

Ribs OR2 - OR10

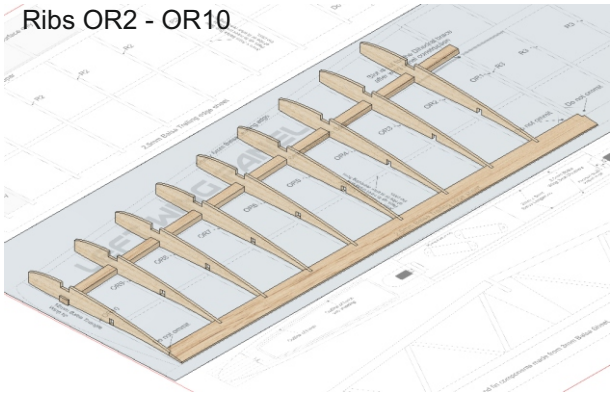

Outer rib Angle OR1 set by the angle jig this time marked “O”

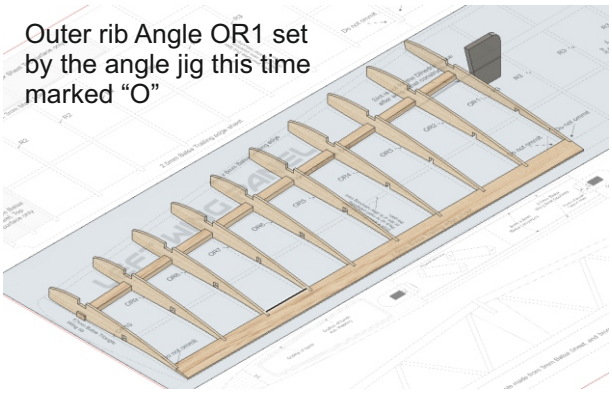

Top Spar

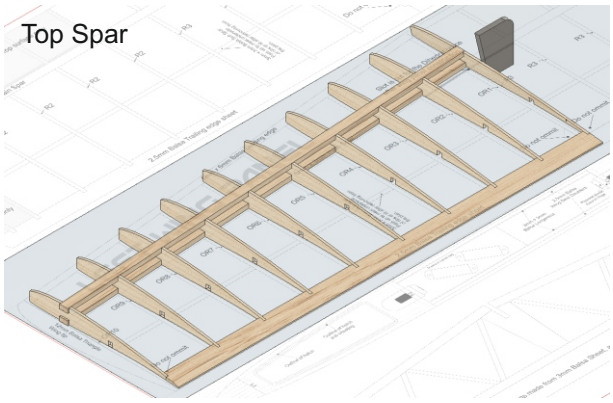

6mm x 6mm Balsa leading edge

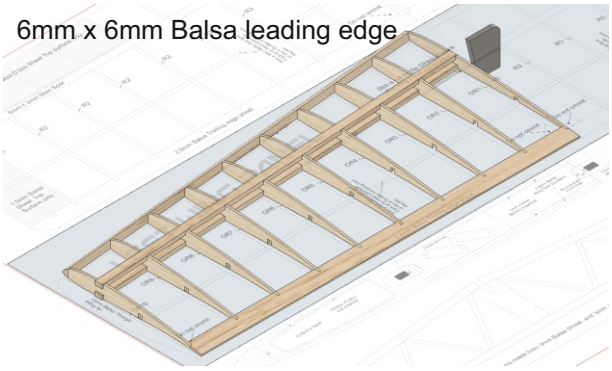

12mm Balsa triangle wing tip
Note orientation!

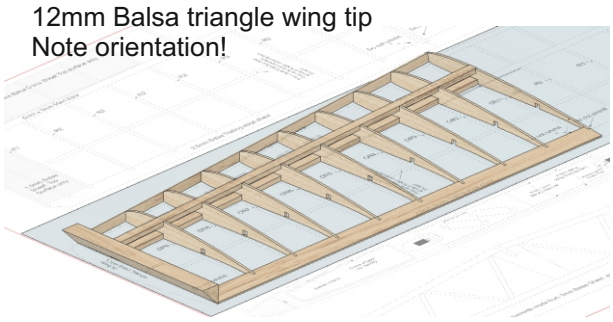

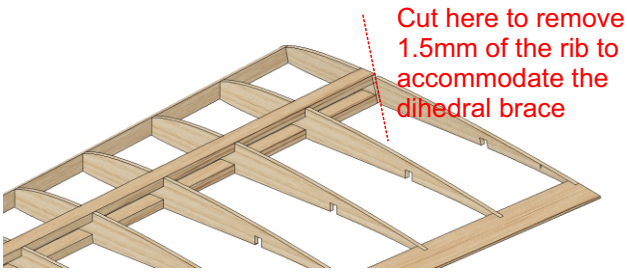

Clamp the dihedral brace whilst the glue sets

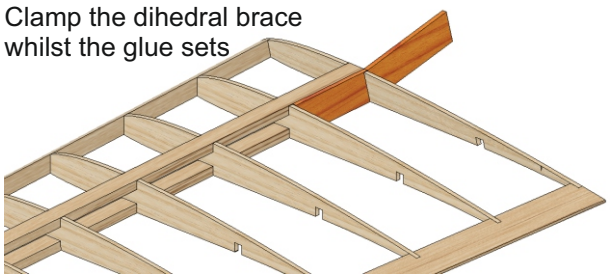

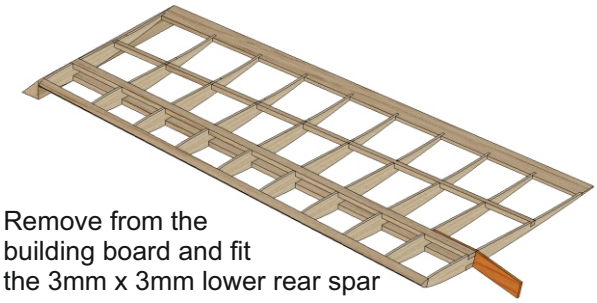

Remove from the building board and fit the 3mm x 3mm lower rear spar

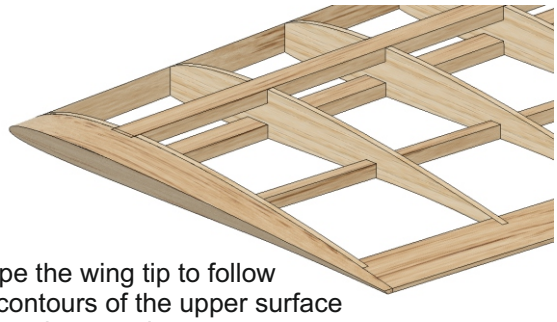

Shape the wing tip to follow the contours of the upper surface of the wing panel

The leading edge and trailing edges need to be sanded to follow the contours of the wing ribs.
A razor plane helps make short work of this but sandpaper glued to a wooden block will work well if you go slowly. Patience here makes a much nicer finished wing

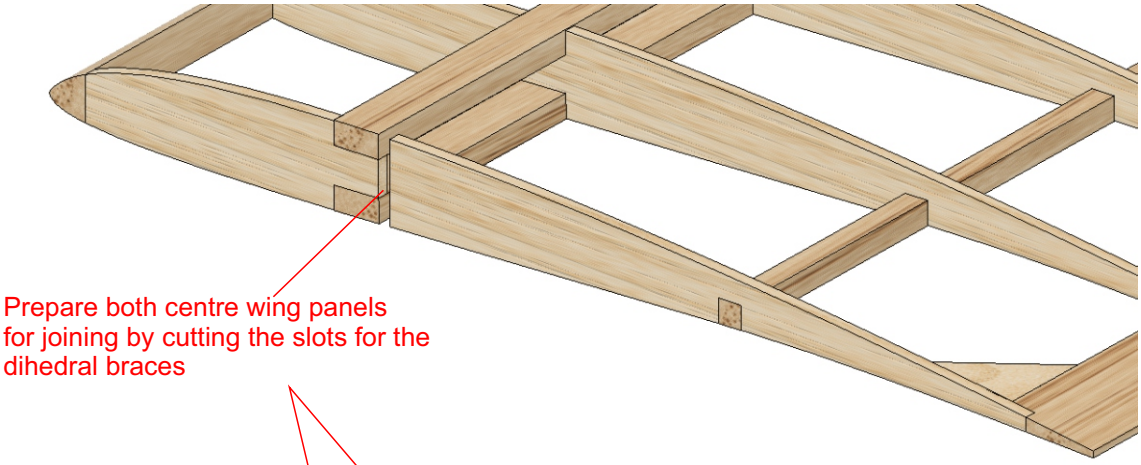

Prepare both centre wing panels for joining by cutting the slots for the dihedral braces

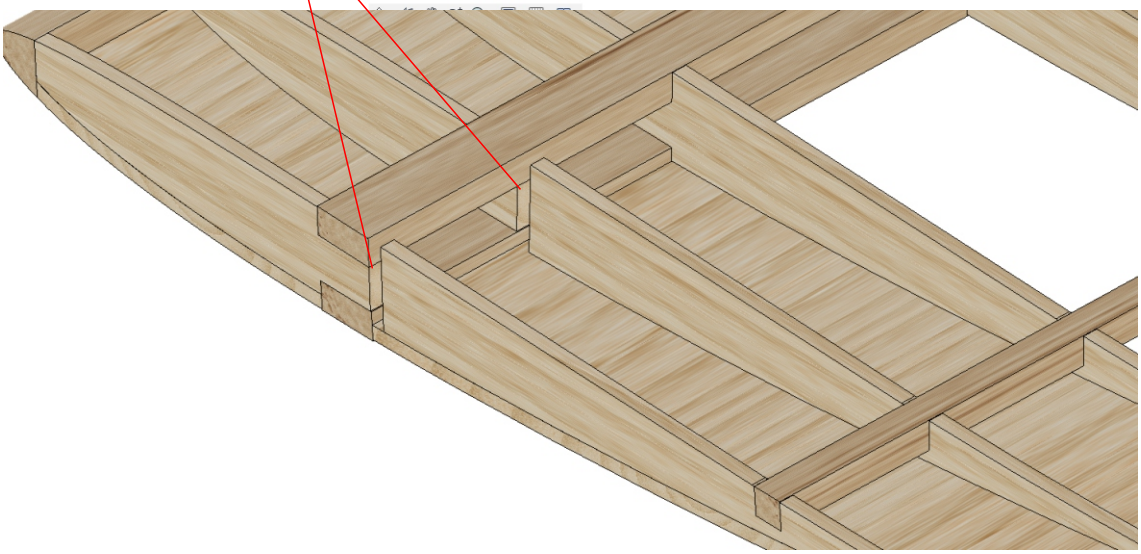

Join the outer wing panels to the centre panels first. We soften the plywood brace by steaming over a boiling kettle to allow it to bend as required

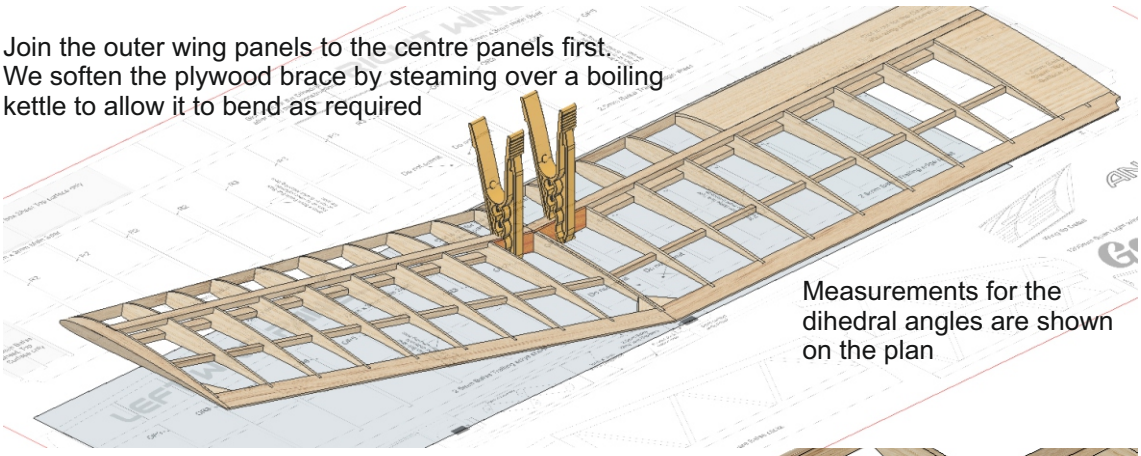

Measurements for the dihedral angles are shown on the plan

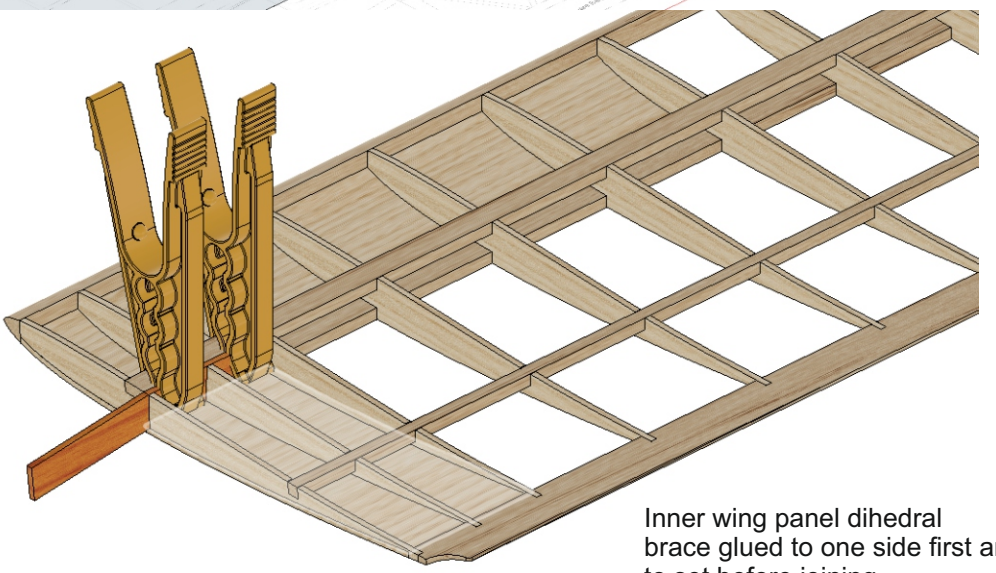

Inner wing panel dihedral brace glued to one side first and allowed to set before joining.

Set aside and allow to fully cure before disturbing
Ideally overnight.

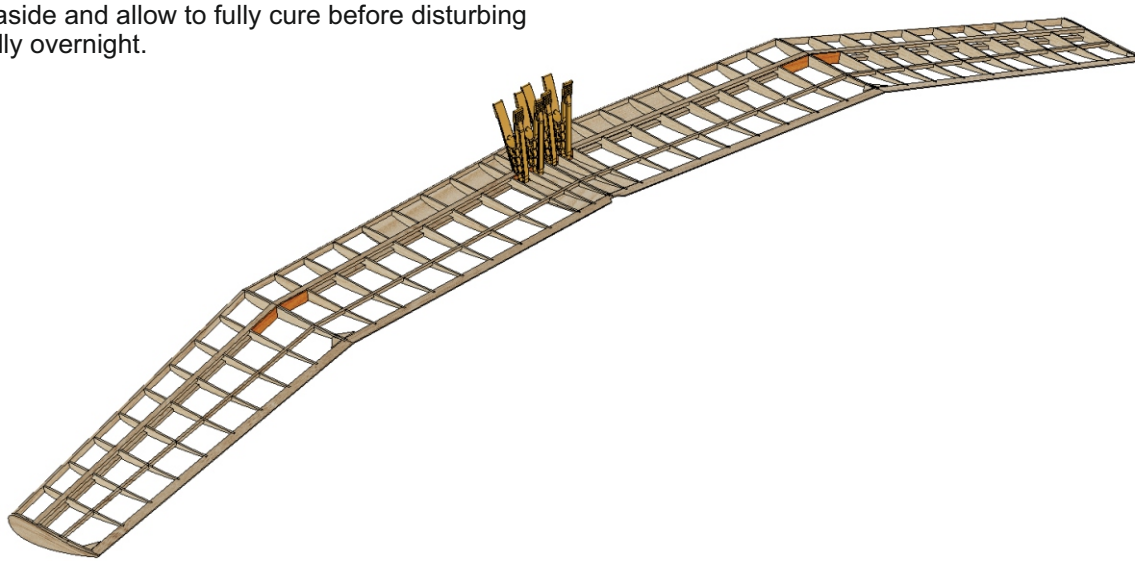

Make a pair of fuselage sides by glueing the front and rear side together. We only recommend a regular wood glue for this. Thick CA can be used but is difficult to sand.

Add the wing seat doublers and 3mm x 3mm balsa longerons. Note that the left longeron is cut short by approx 50mm to clear the rudder snake

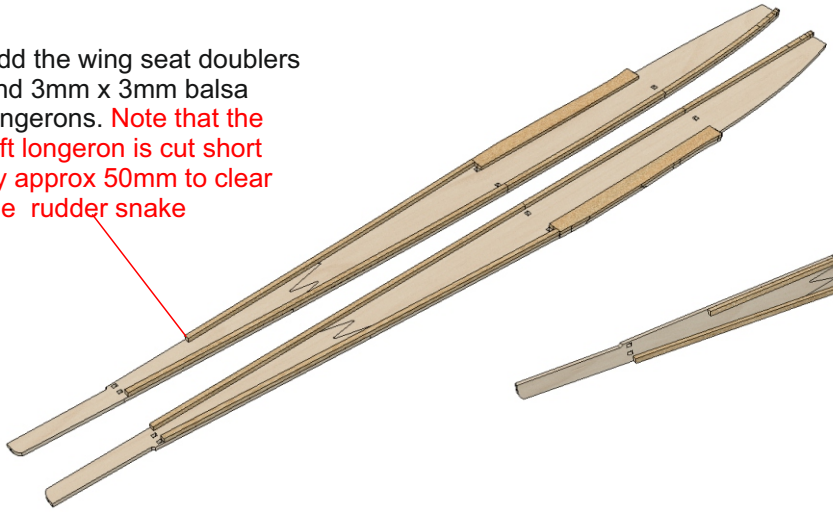

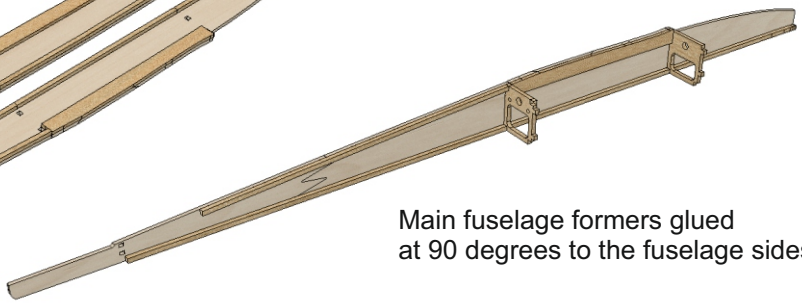

Main fuselage formers glued at 90 degrees to the fuselage sides

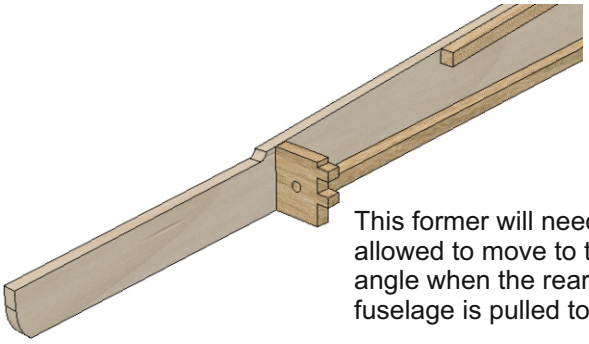

This former will need to be allowed to move to the correct angle when the rear of the fuselage is pulled together.

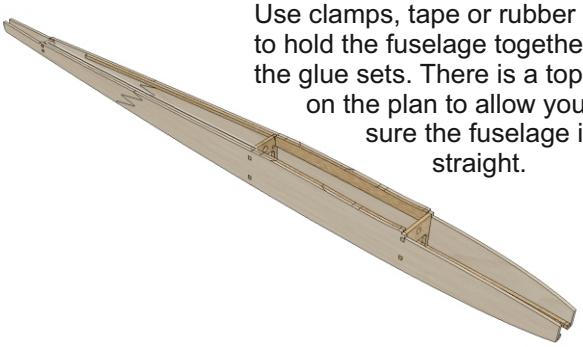

Use clamps, tape or rubber bands to hold the fuselage together whilst the glue sets. There is a top view on the plan to allow you to make sure the fuselage is nice and straight.

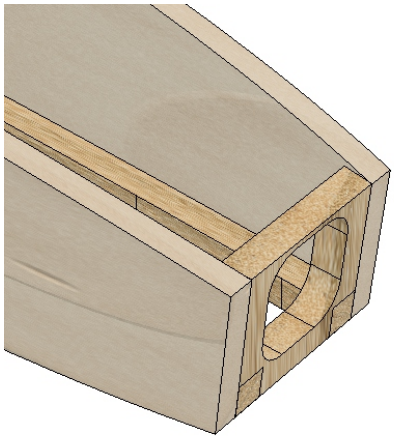

When the glue has set on the 3 formers previous fitted the nose former can be added . Again ensure the fuselage is straight using the plan

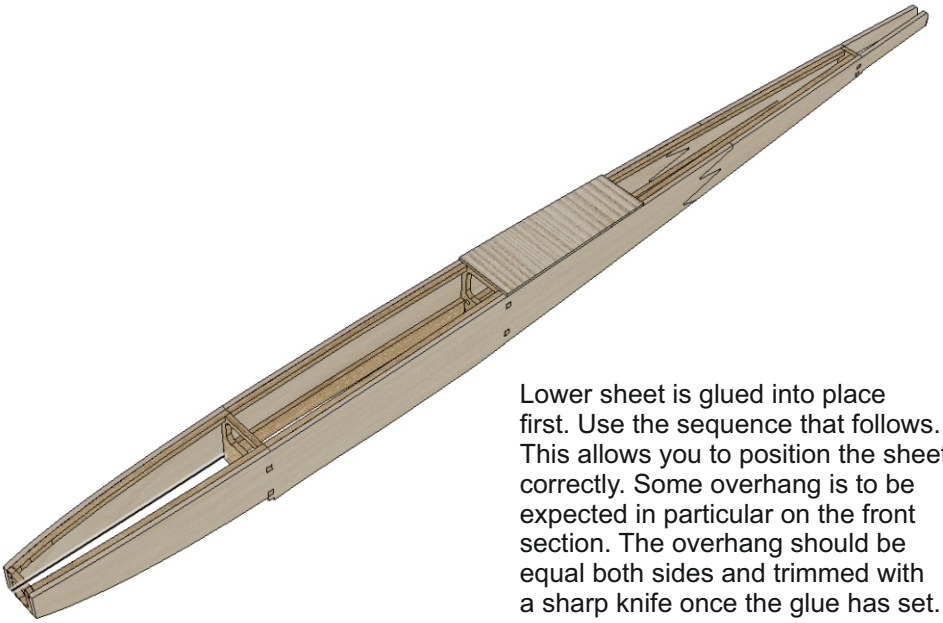

Lower sheet is glued into place first. Use the sequence that follows. This allows you to position the sheet correctly. Some overhang is to be expected in particular on the front section. The overhang should be equal both sides and trimmed with a sharp knife once the glue has set.

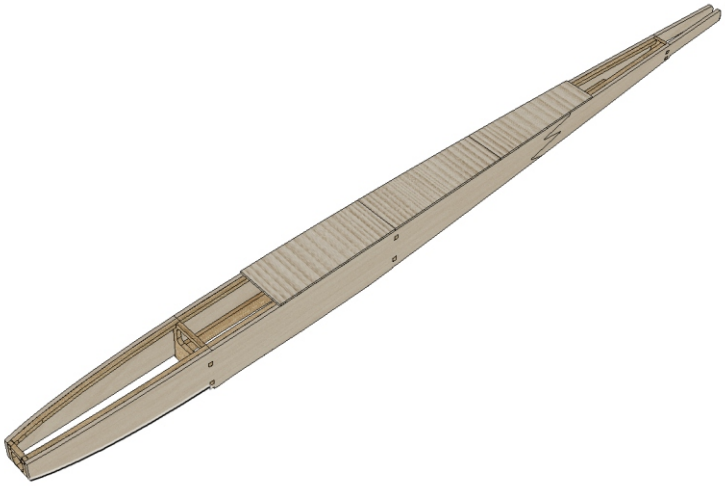

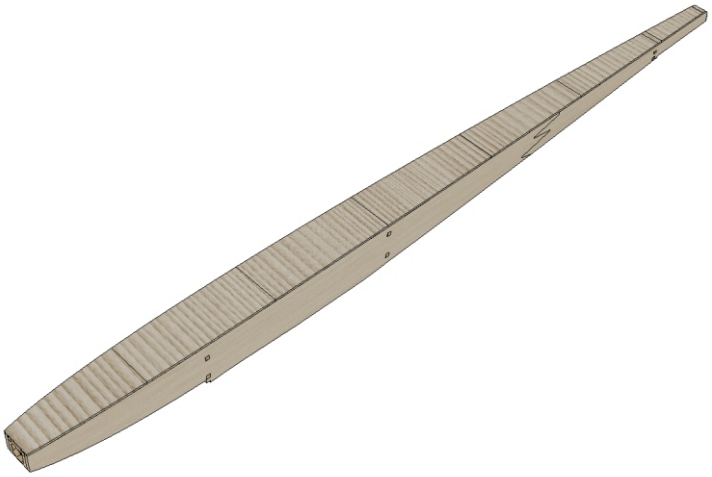

The elevator pushrod sleeve is fitted before any sheeting is applied to the top side of the fuselage. Use CA (Superglue) or epoxy.

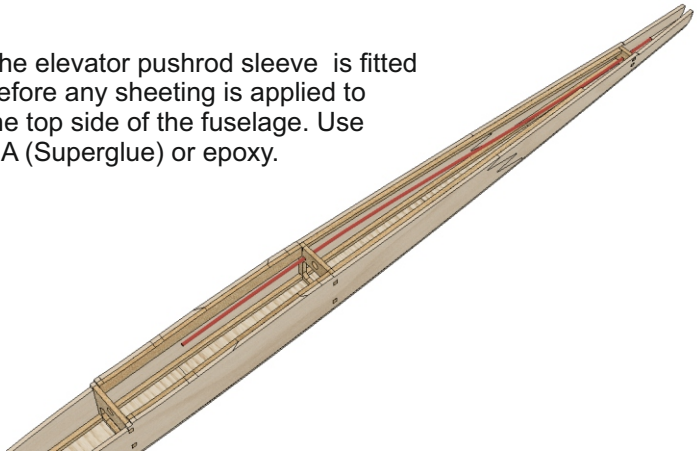

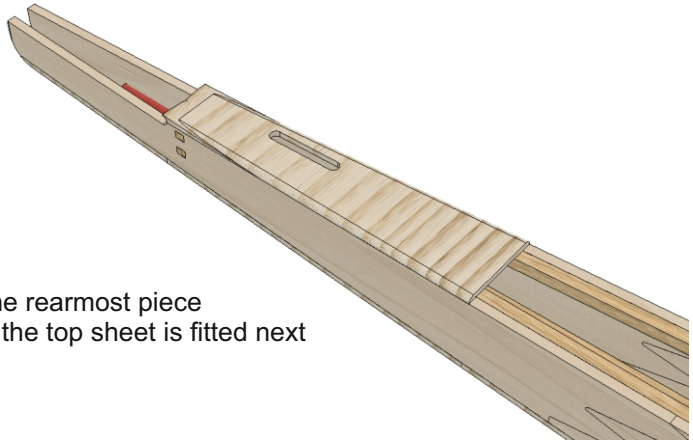

The rearmost piece of the top sheet is fitted next

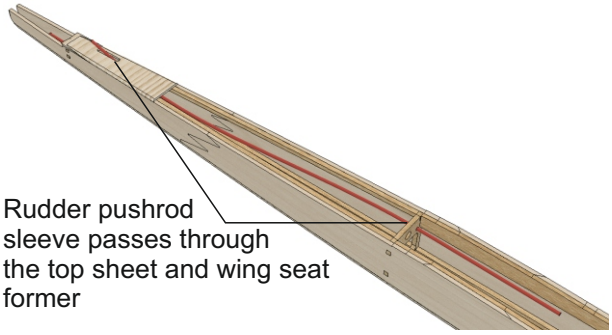

Rudder pushrod sleeve passes through the top sheet and wing seat former

Glue into place the wing dowels assembled at the start of the build. Note the orientation

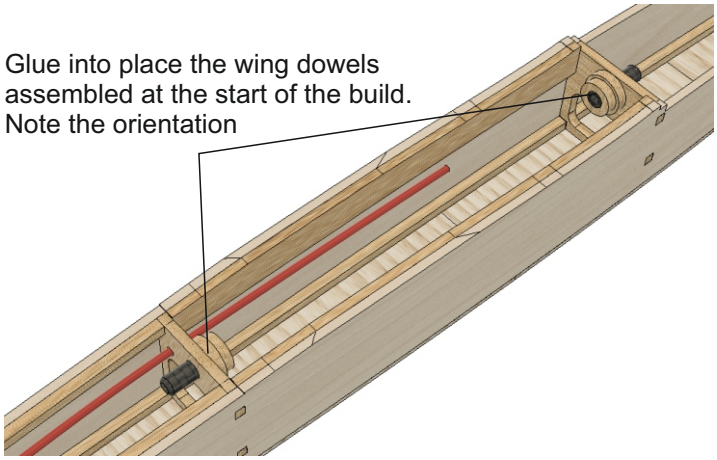

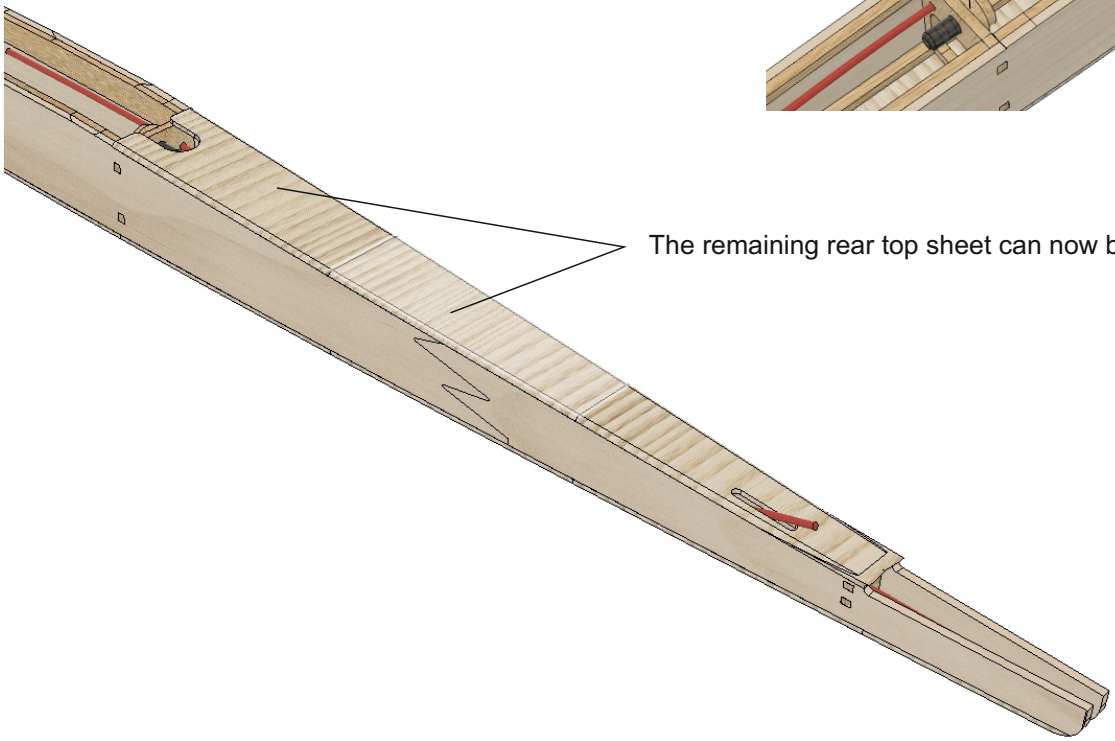

The remaining rear top sheet can now be fitted

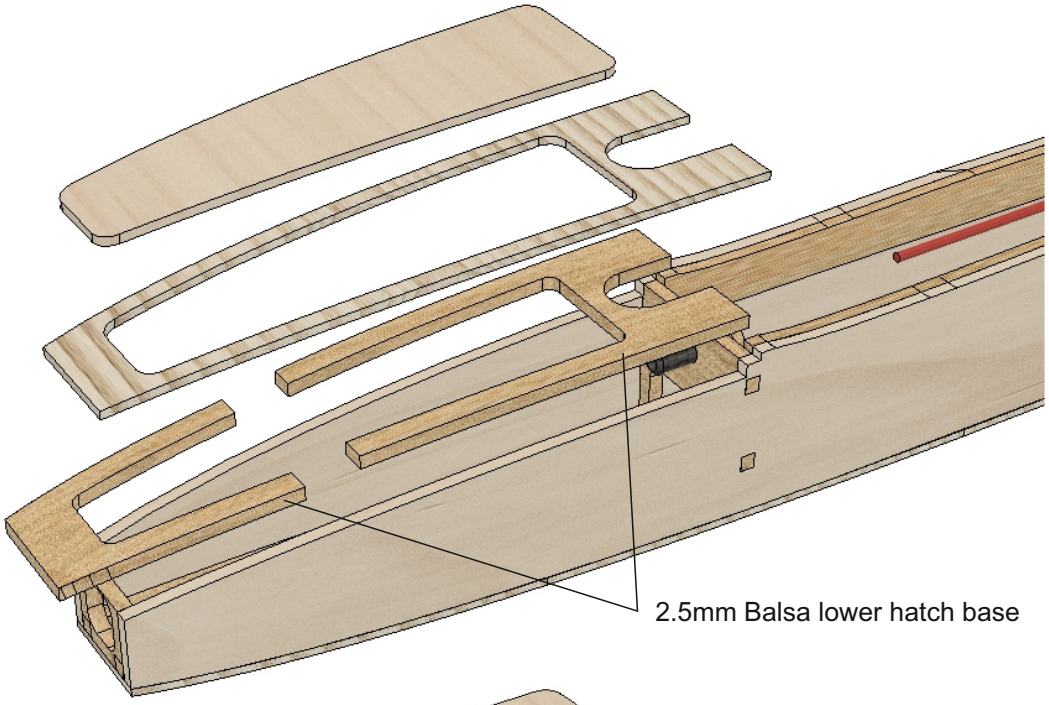
2.5mm Balsa lower hatch base

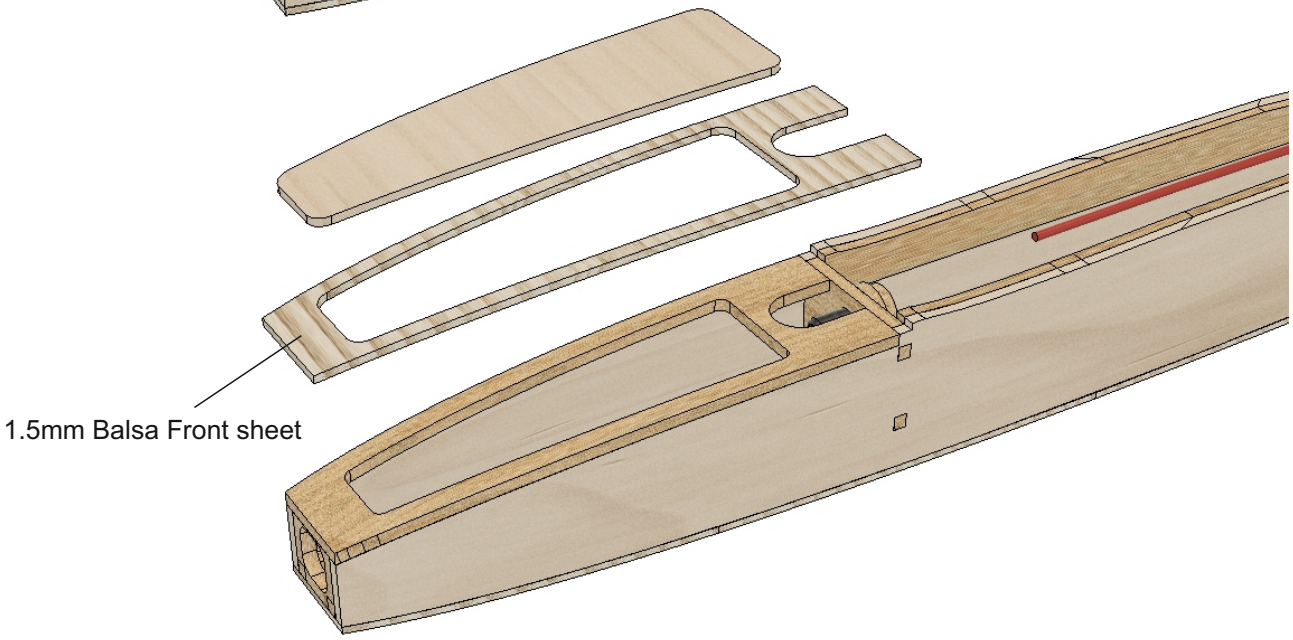
1.5mm Balsa Front sheet

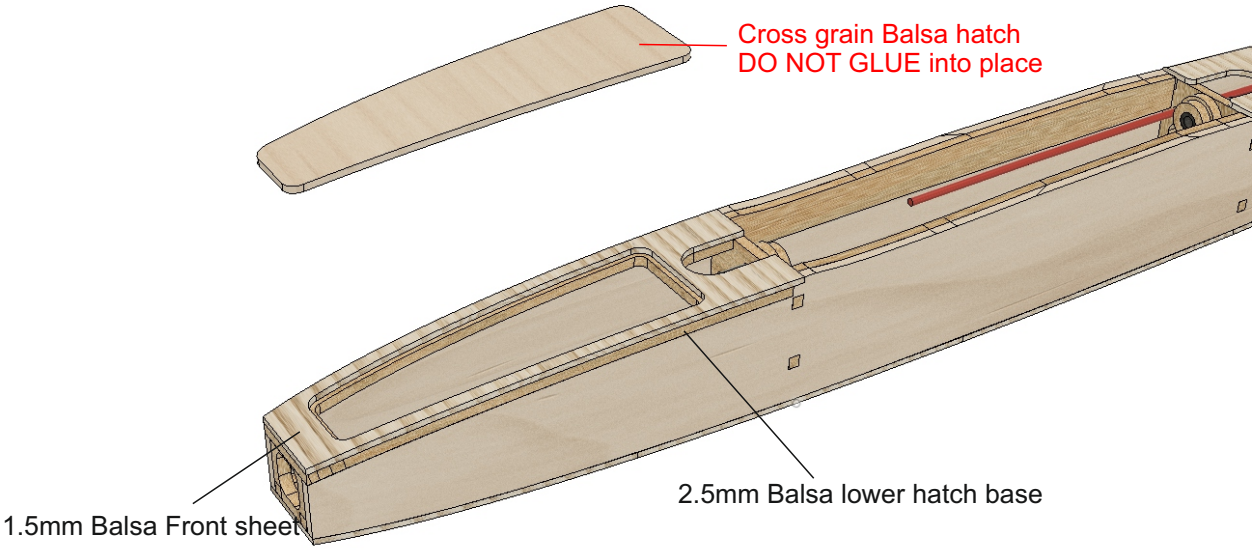
Cross grain Balsa hatch
DO NOT GLUE into place
2.5mm Balsa lower hatch base
1.5mm Balsa Front sheet

Glue the nose block into place and secure with tape
while the glue dries. Use Wood glue or expoxy

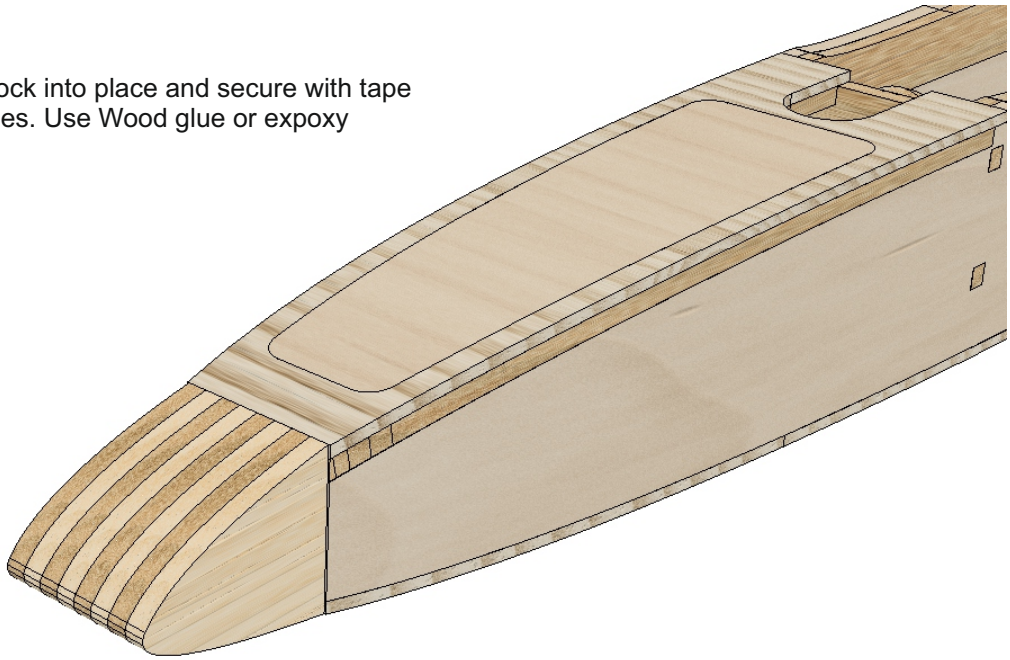

Nose contours viewed from above after shaping with 180 grit sand paper ready for final sanding

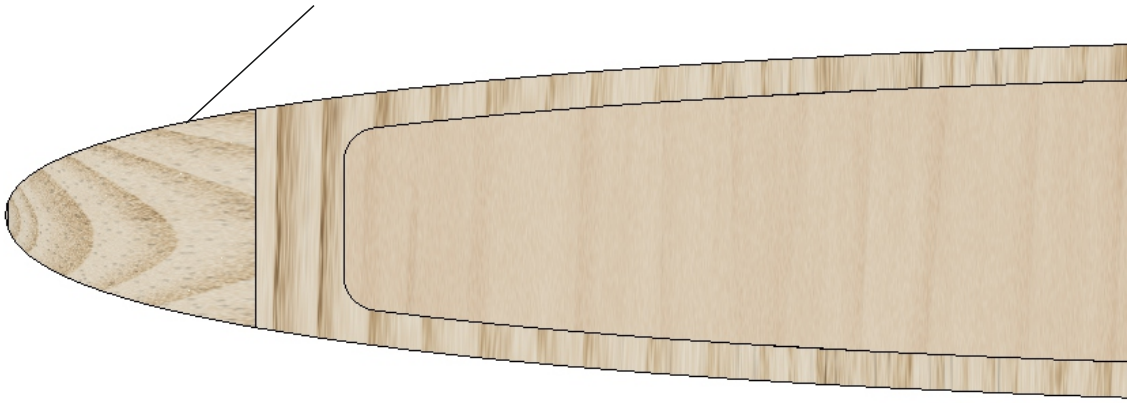

Check the fit of your servos in the servo tray before
fixing. Adjust the openings as required.
We find it easier fo fit the servos to the tray before glueing the tray
into place. However we chose not to glue the tray into place yet
The servo tray can be moved to change the CG in the unlikely
event your model is likely to be nose heavy.

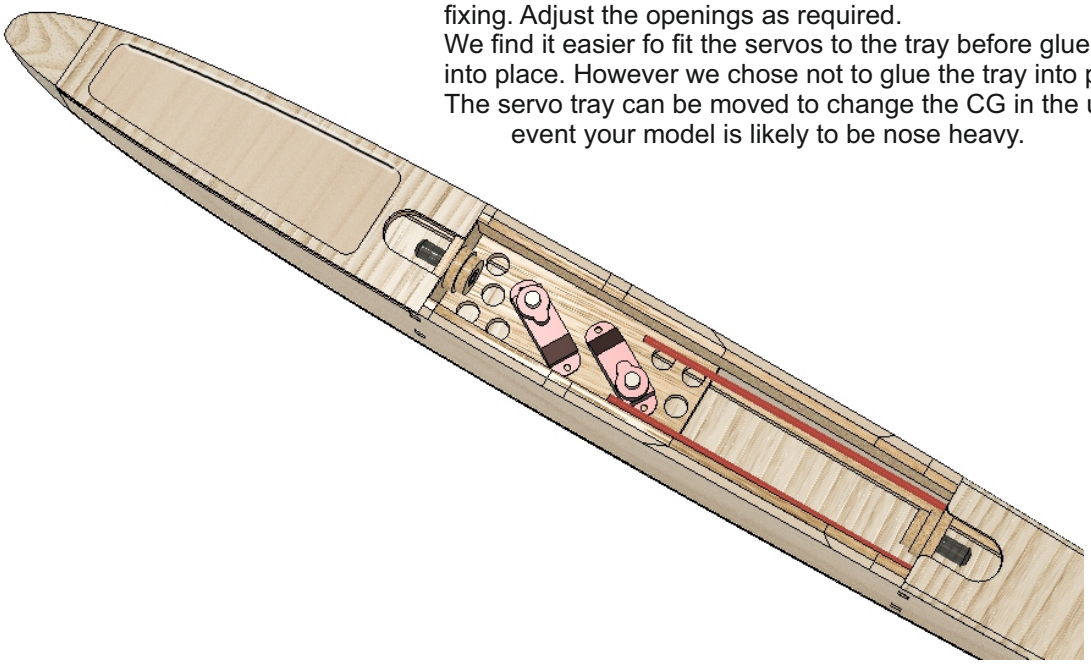

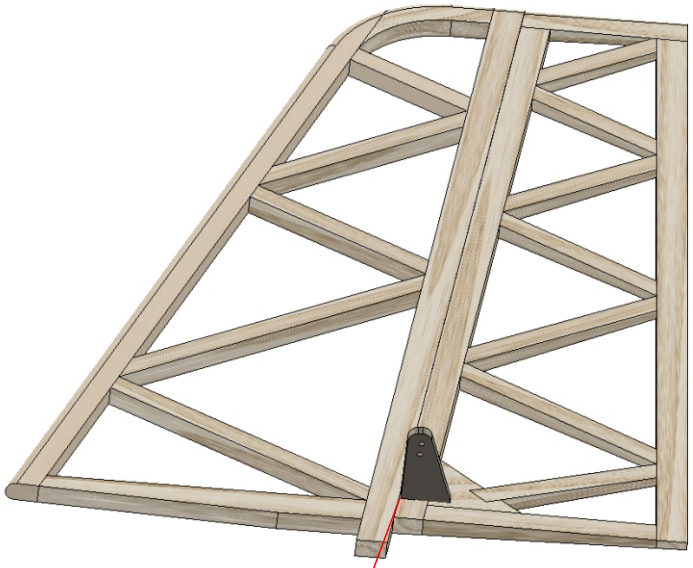

Before covering cut slots to accept the plywood rudder and elevator control horns as shown. ***DO NOT GLUE***. The control horns are only glued into place when the pushrods have been installed later in the finishing process.

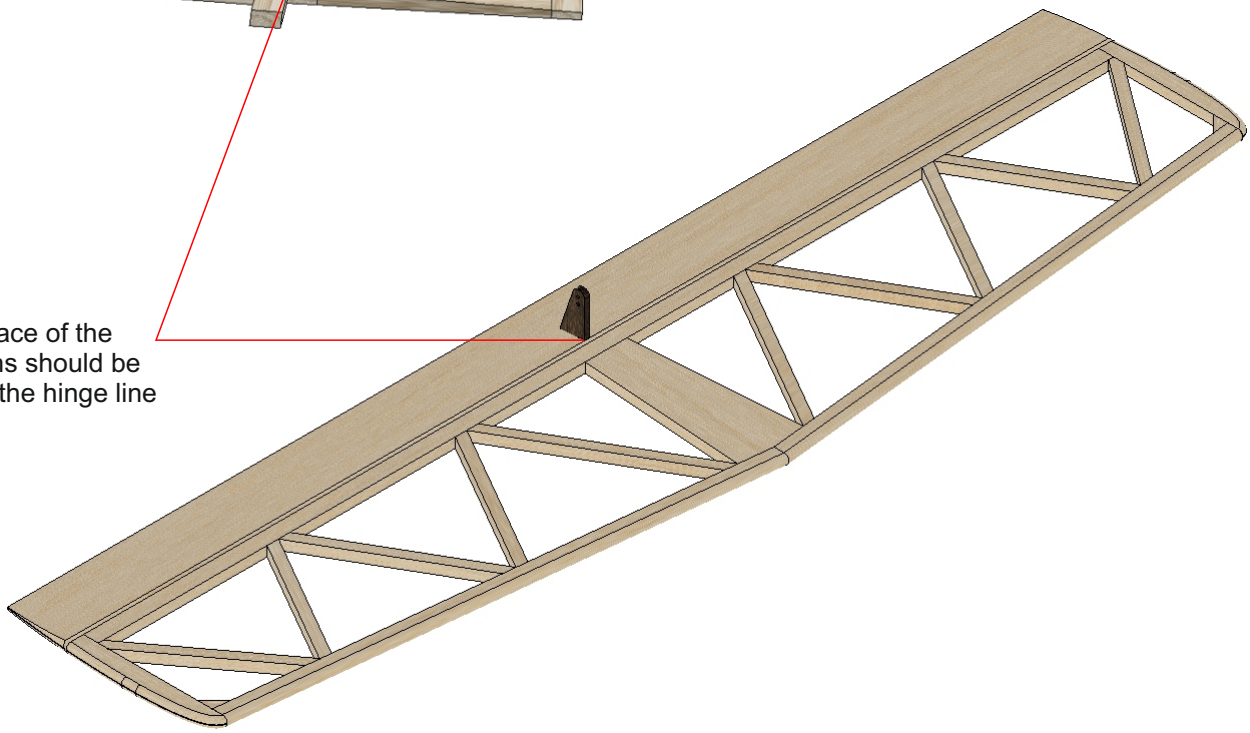

Note front face of the control horns should be as close to the hinge line as possible

All of the major component assemblies are now ready for final sanding. We have already detailed the requirements for the shapes of the wing leading and trailing edges along with those of the tail components. There isn't much shaping you can do to the fuselage. We rounded off 4 main edges with a radius of around 3mm. The nose block should smoothly follow the contours of the fuselage sides and top and bottom surfaces. The nose block is then just sanded the further to get a shape you find pleasing to the eye. There is no critical sanding on the fuselage at all. Do not sand the wing seat area or where the tailplane is mounted.

The wings and tail surfaces need covering with a lightweight low shrink covering to avoid warps. Our own product feather cover is fantastic on this type of model structure. If you wish to add colour as we did on the main photographic images you will have seen of the completed model this is easy to achieve. The parts were simply spray painted using a regular spray can before the covering was applied. We have used numerous types of paints to achieve these results on numerous models. The type of paint, brand etc we don't worry about, we use what we have or but the cheapest we can find.

Other coverings of course can be used if selected properly. Oracover Oralight offer a range of solid colours and also transparent colours that are suitable for lightweight structures. Hangar 9 Ultracote Parklite is also suitable but not easily available in europe.

The fuselage can be covered in any regular or lightweight weight iron on materials, Glass clothed or Tissue and dope. A covering must however be used. Painted balsa alone will result in a brittle fuselage structure.

We wont discuss how to cover the components. There are lots of resources available for this especially You Tube Nick Chitty has a detailed video showing how to use feather cover.

The illustrations below indicate how to check that the tailplane and fin are accurately aligned when glued into place. Remember to remove the covering where required to achieve a balsa to balsa bond. A small amount of epoxy is a good adhesive for this as it allows some working time to reposition, without several hours of waiting for a wood glue to set. Superglue can be used but this option is really for the experienced model builders only. All datum lines shown, in red, blue and green must be equal on the left and right hand sides when viewed from above. We use cotton thread and a pin as a really easy way to get these correct.

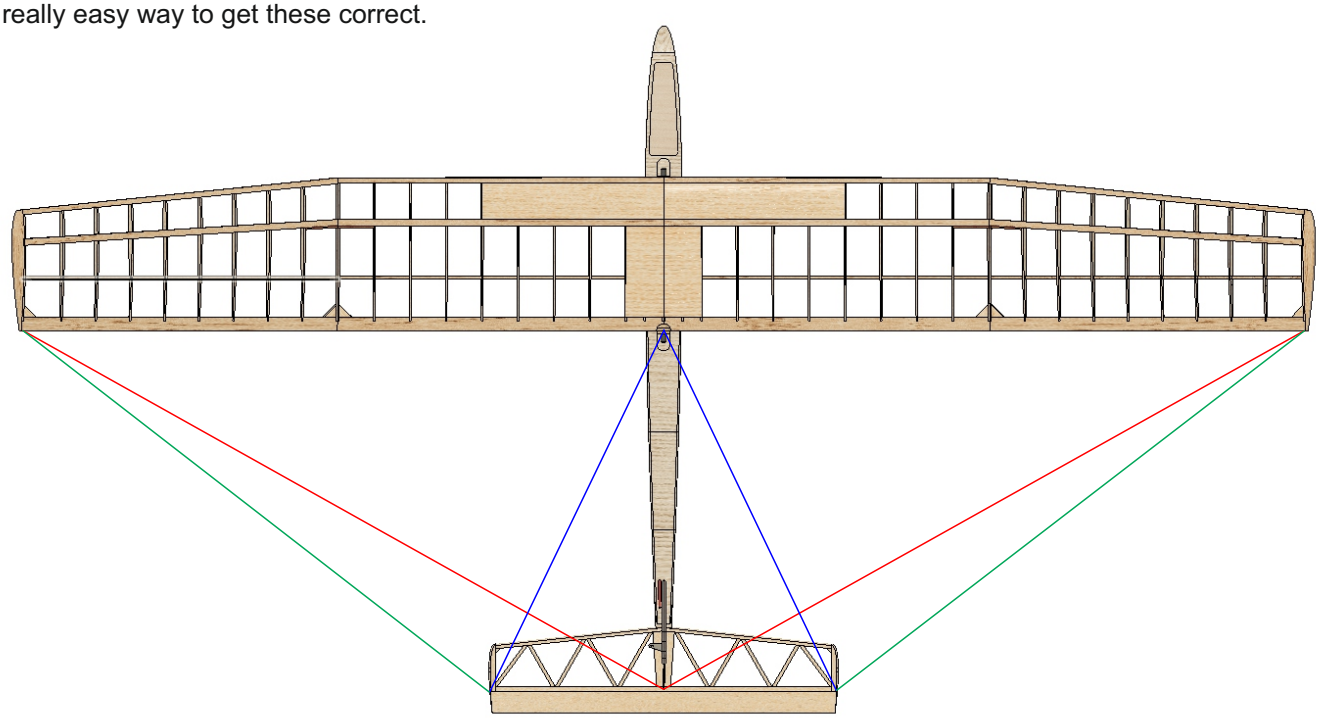

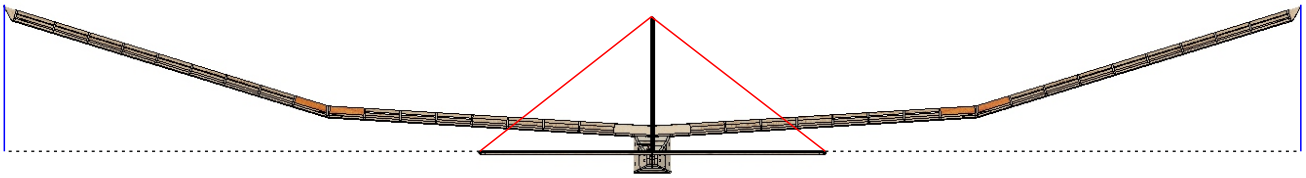

The pushrods supplied with the kit are 0.8mm music wire. If you want to make them operate as free as possible inside the outer sleeves then wipe them with a silicone furniture polish, or a very light machine oil. .
We terminate the outer ends of the pushrods at the elevator and rudder control horns with a simple Z bend. This is easy made using needle nosed pliers. Prepare both the rudder and elevator pushrods at one end only

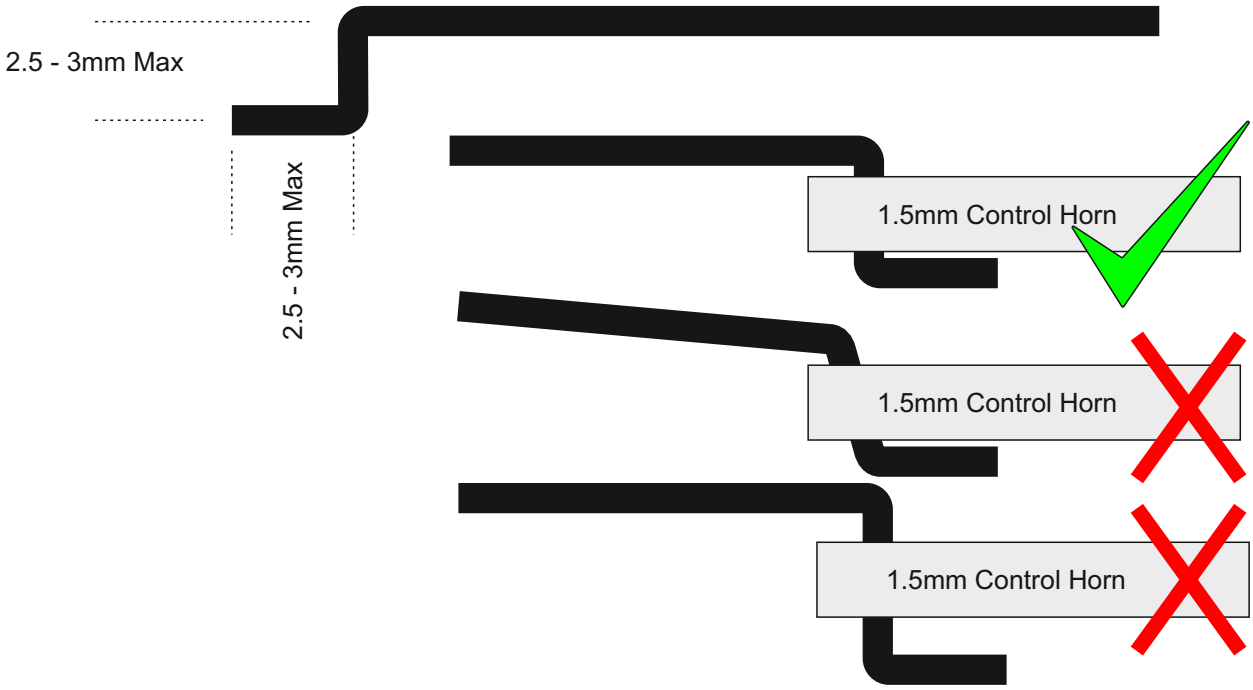

Slide the rudder pushrod into the outer sleeve. Hook up the rudder control horn and tack glue the control horn in place This gives a chance of removing the horn if an error is made with the pushrods. The horn can be secured with thin superglue once your happy.

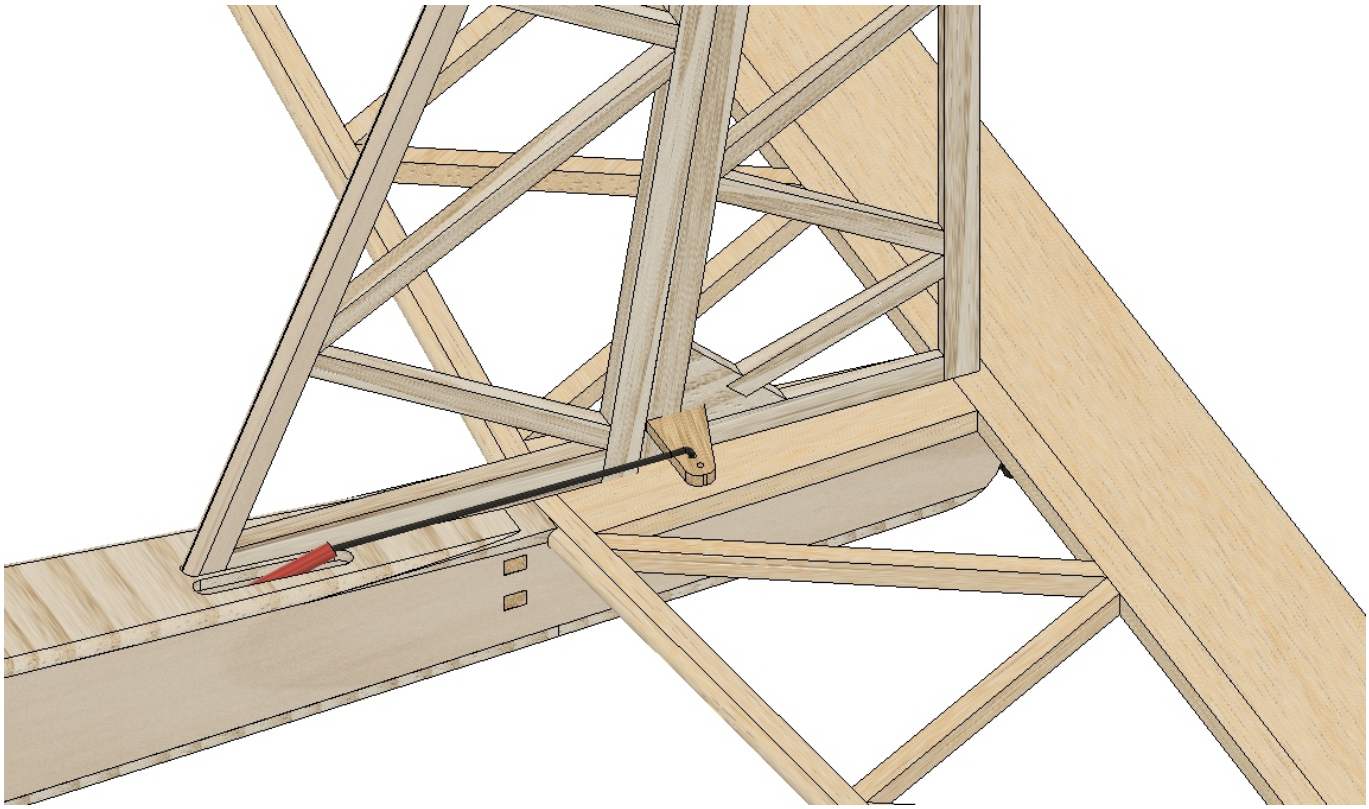

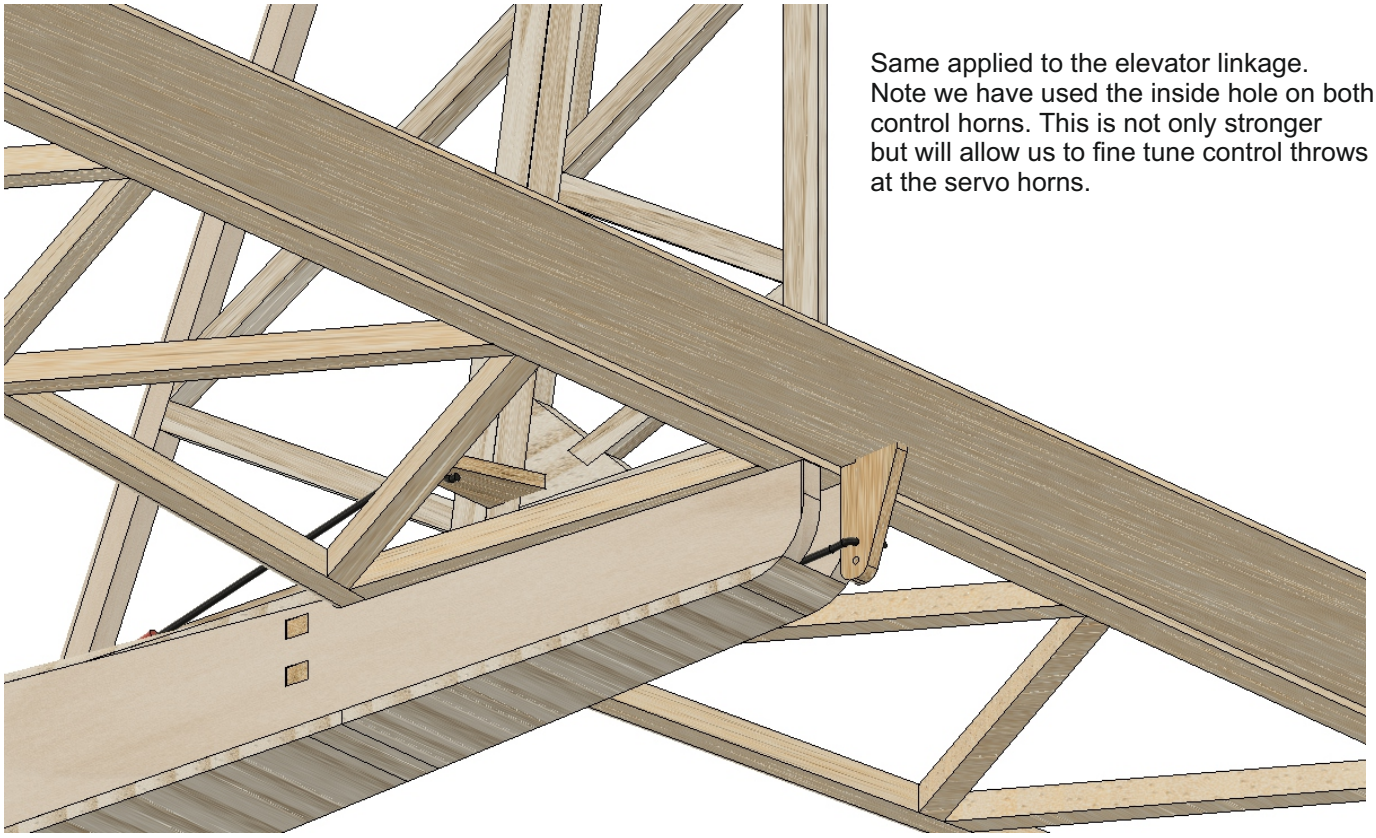

Same applied to the elevator linkage. Note we have used the inside hole on both control horns. This is not only stronger but will allow us to fine tune control throws at the servo horns.

At this stage the servo tray should still not have been glued into place. As the fuselage is limited in depth you need to form Z bends again to couple to the servo arms. Having the ability to facilitate a small amount of movement in the servo tray can help optimise the control runs with minimal sub trim being used on the transmitter. Once your happy glue the servo tray into place checking once again that the control surfaces are at neutral.