COLOURCLAD

PURLIN AND RAIL CLEATS

BOLT ON CLEAT

6mm Galvanised steel

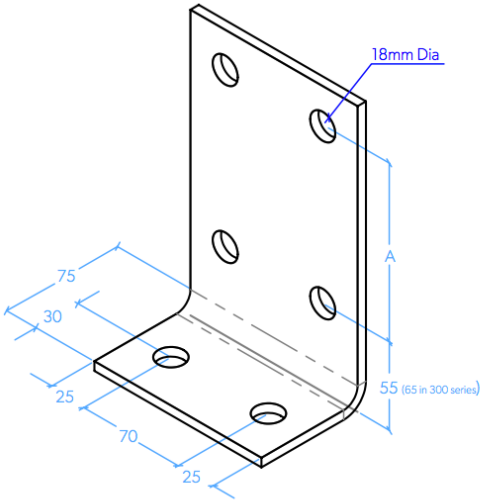

MARK No	No REQUIRED	PURLIN SERIES

WELD ON CLEAT

6mm Black steel

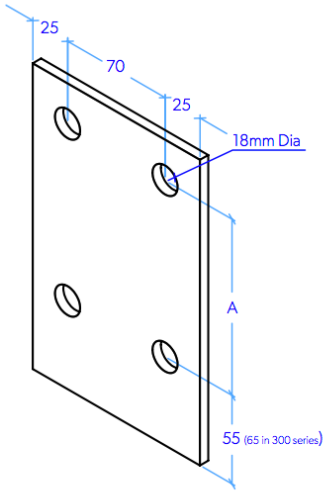

MARK No	No REQUIRED	PURLIN SERIES

PURLIN SERIES	A
140	50
175	85
200	110
230	140
260	170
300	190

TRIMMER / POST CLEATS

2mm Galvanised steel
3mm Galvanised steel
6mm Galvanised steel

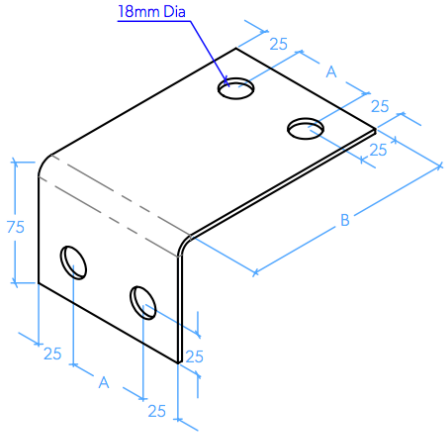

MARK No	No REQUIRED	PURLIN SERIES	B	GAUGE 2/3/6