Assembly Instructions

ITEM CODE: GOPS-S1-UWH

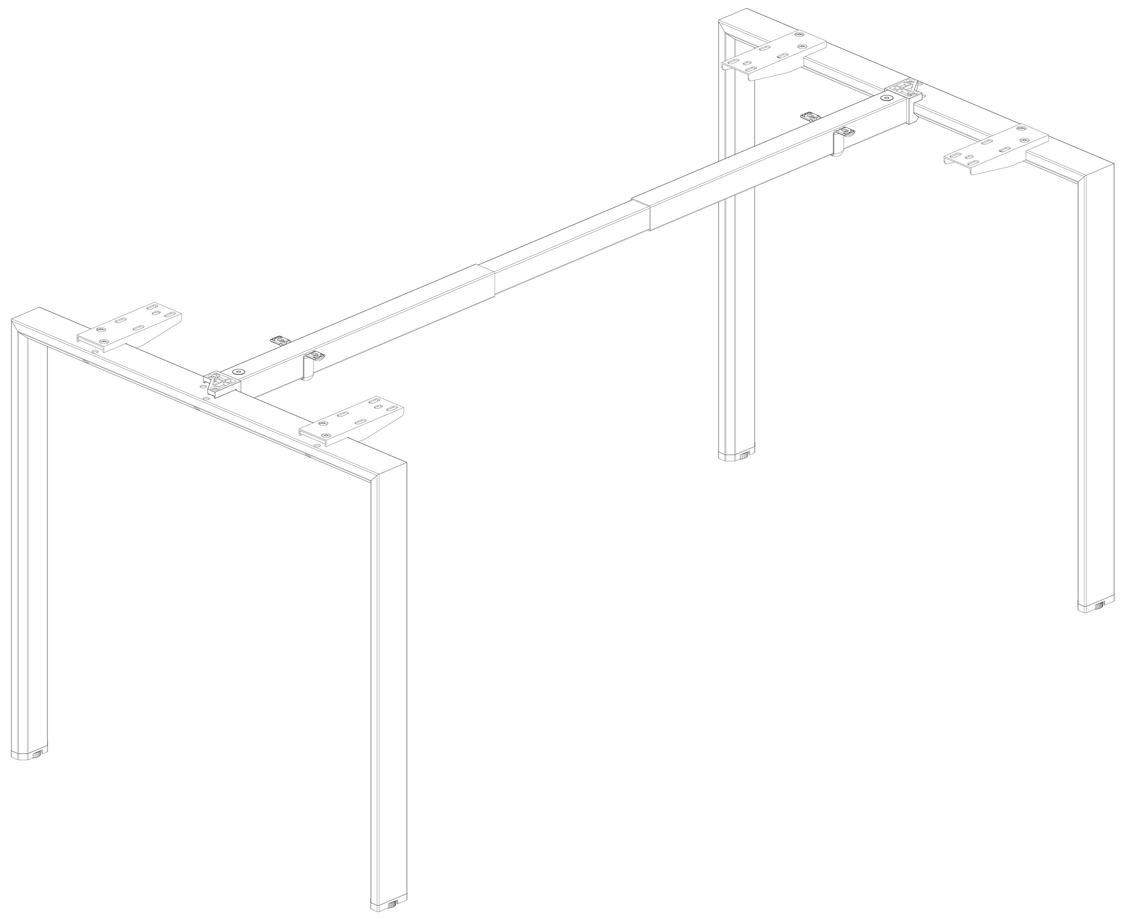

A	B
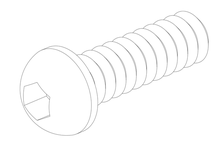 Screw M6*20 12 Pcs	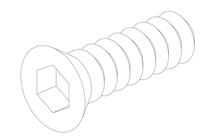 Screw M6*17 2 Pcs
C	**D**
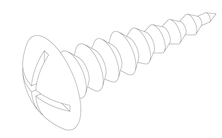 Screw ST5*20 20 Pcs	4# Allen Key 1 Pc

Step 1

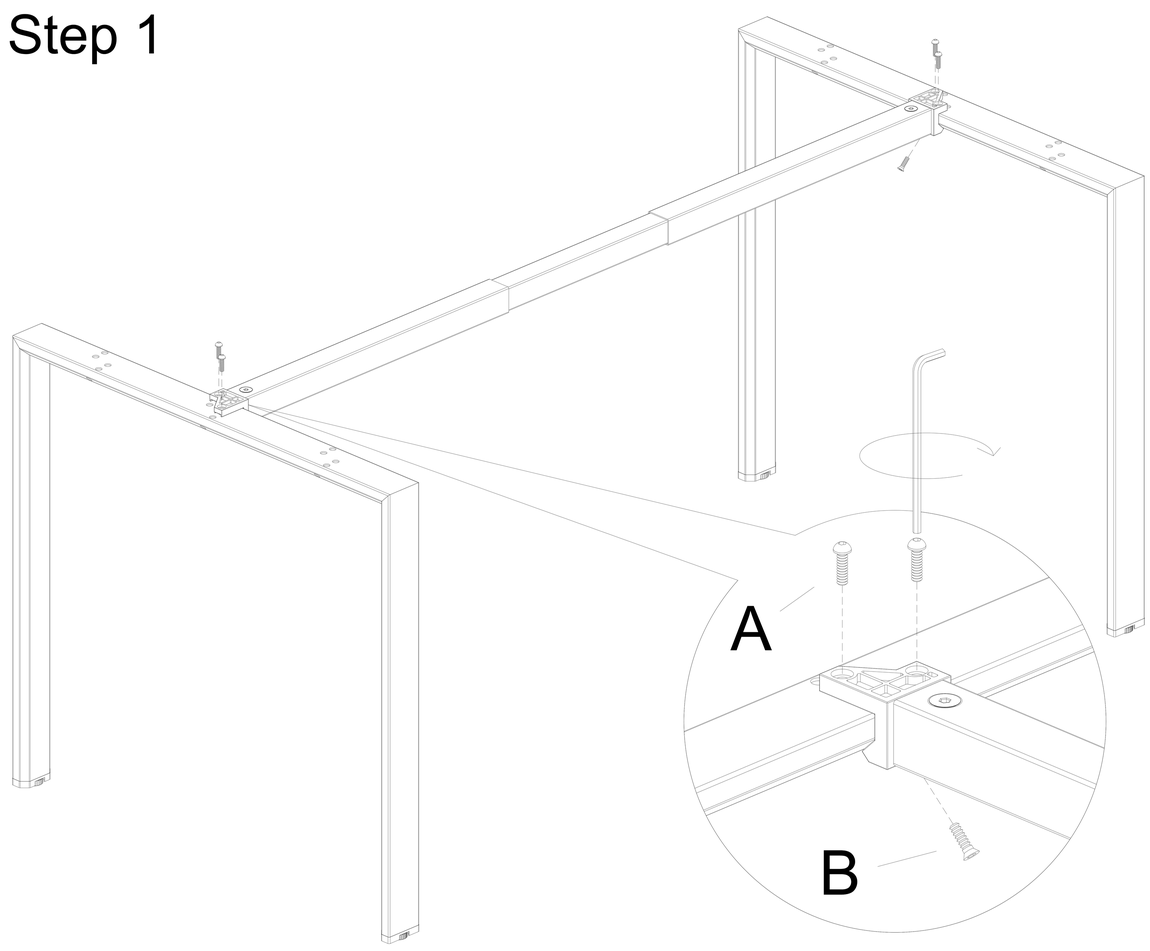

Step 2

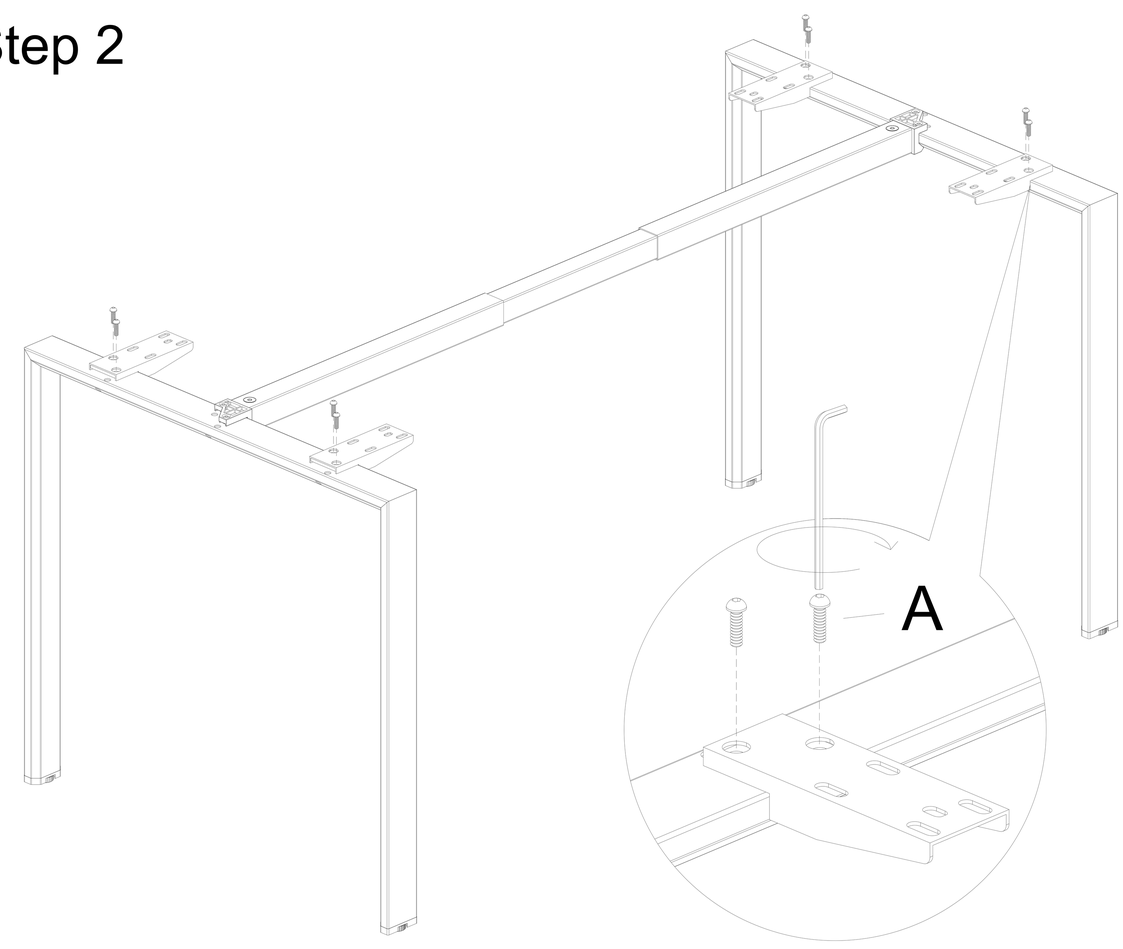

Step 3

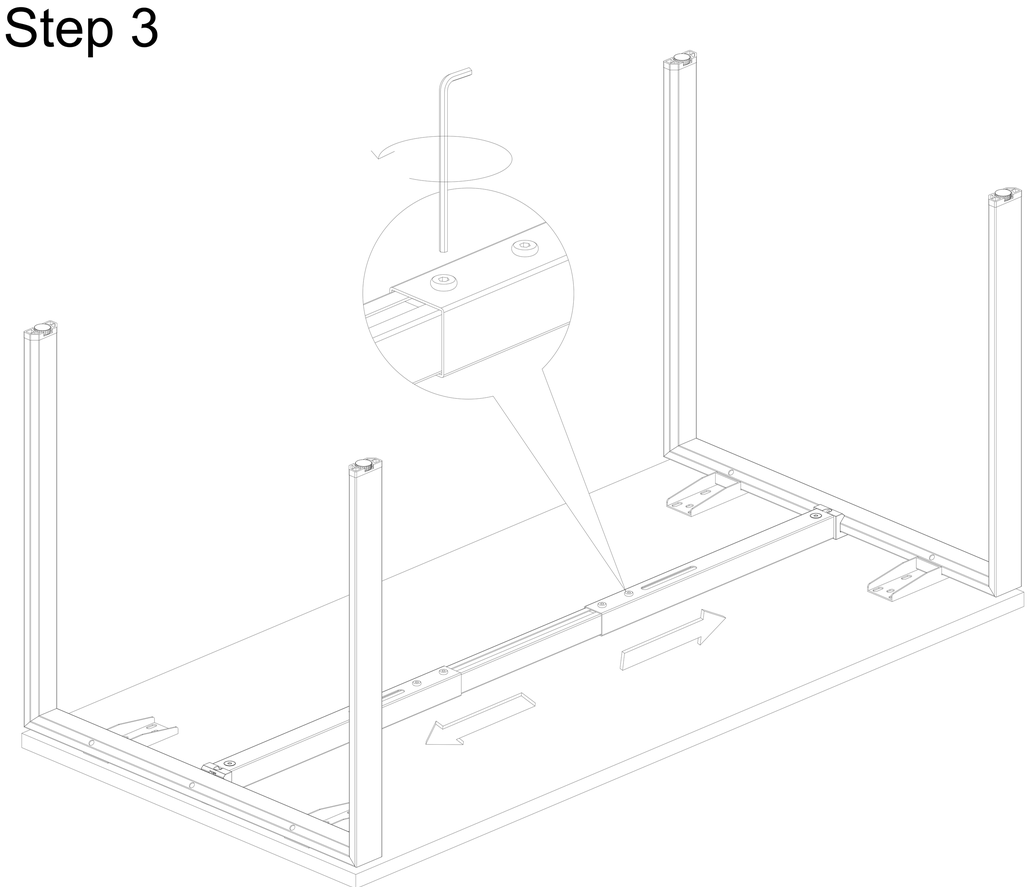

Step 4

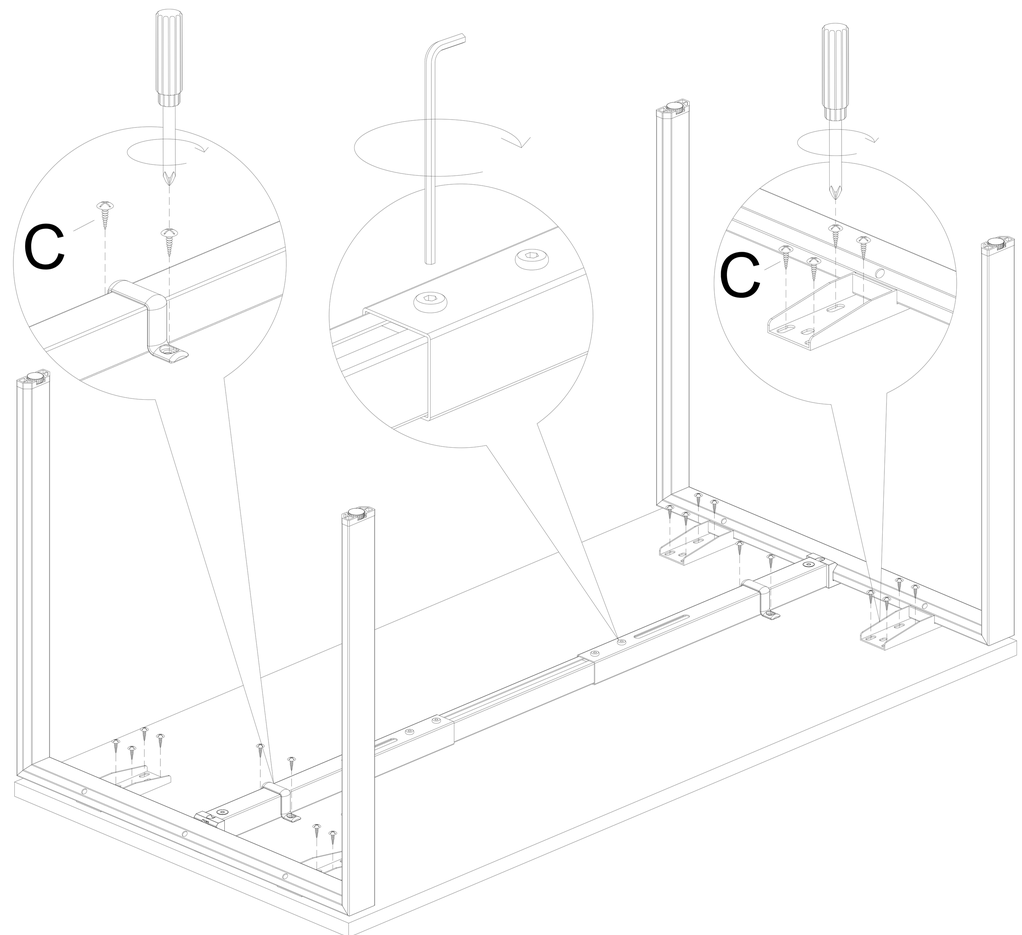

IMPORTANT NOTE:

·Place all laminated parts on a clean and smooth surface such as a rug or carpet to avoid the parts from being scratched.
·Check to be sure that you have all parts and hardware.
·Remove all wrapping materials,including staples and packing straps before you start to assemble.
·Don't tighten all screws/bolts until all the pieces are completely assembled.
·Keep all hardware parts out children's reach.
·It is recommended for 2 people to complete this assembled.

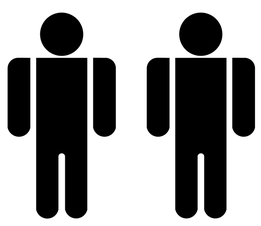

Two people are required to assemble and move this model.