TOOLS	Connecting Parts		
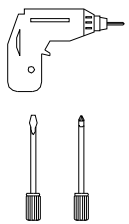	Ⓐ X8	Ⓔ X5	
	Ⓑ X8	Ⓕ X3	
	Ⓒ X2	Ⓖ X3	
	Ⓓ X16		

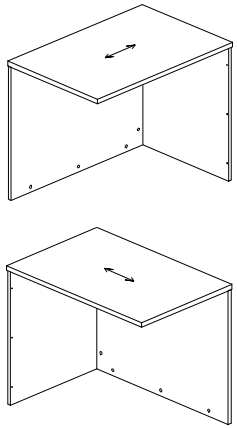

OM-PRB18--R/L
Assembly Drawing

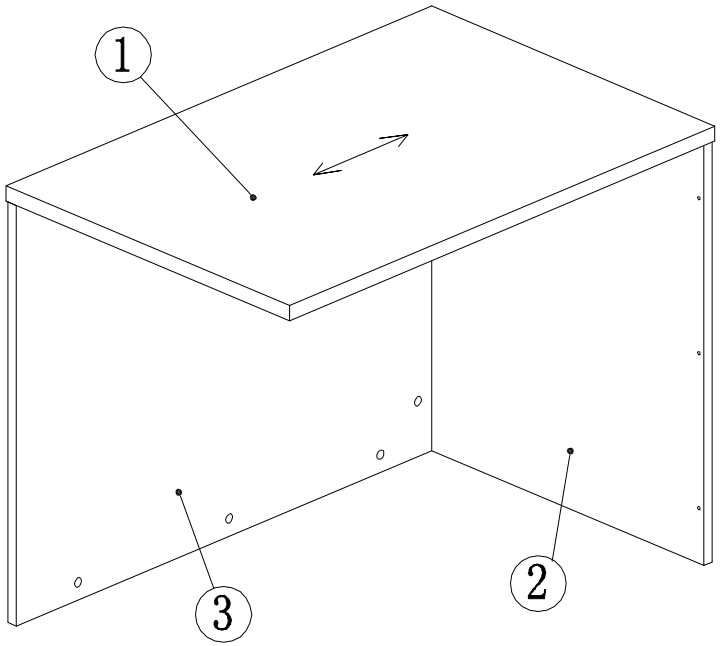
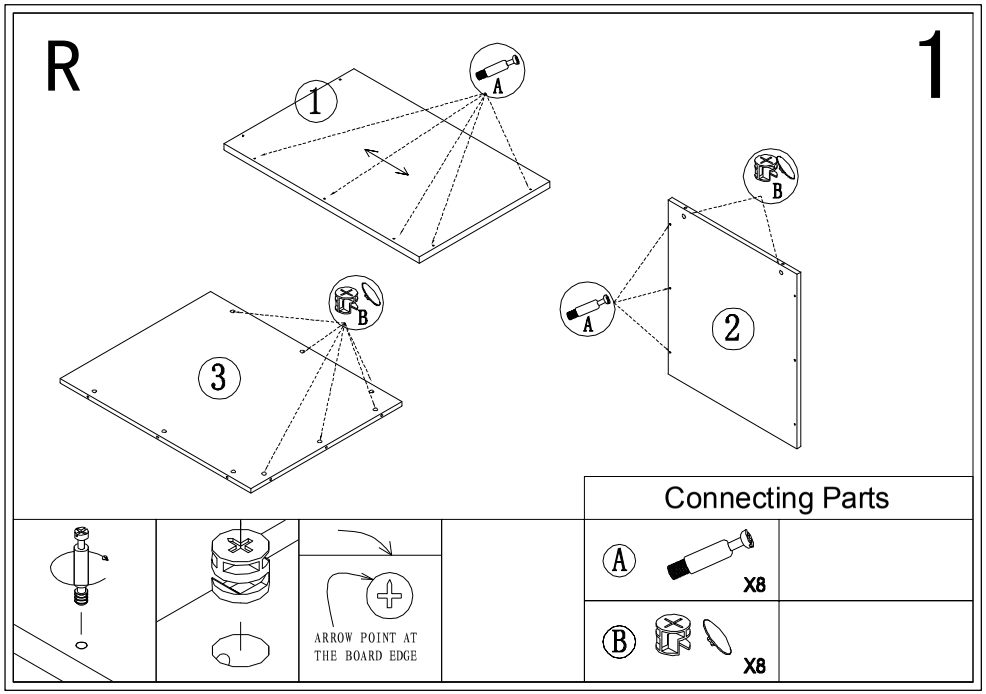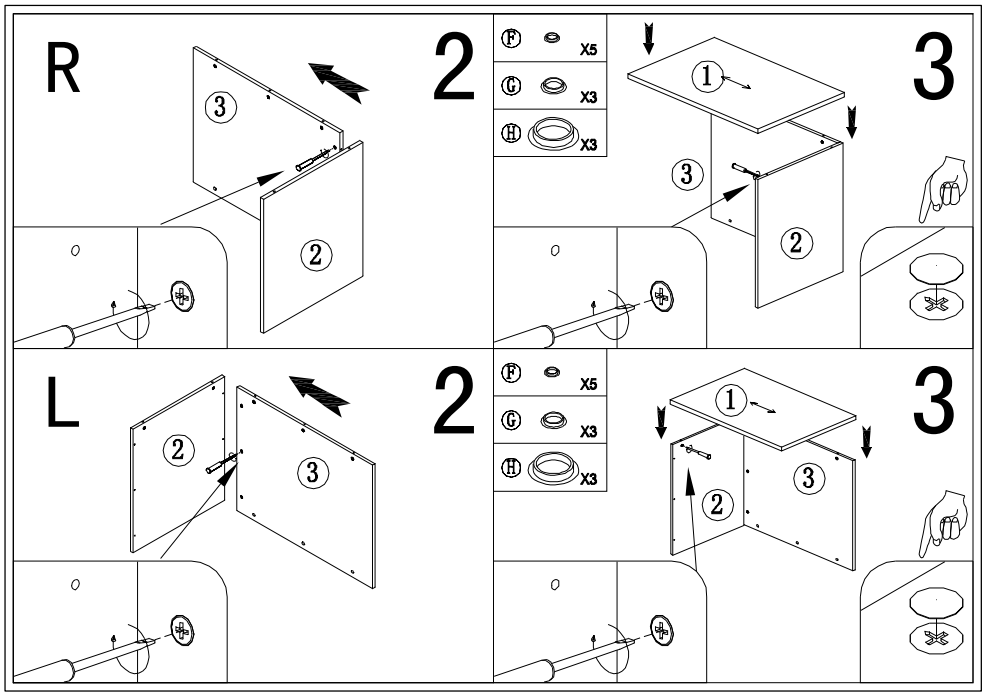
Series No.	Specification (W*D*H)	qty	Series No.	Specification (W*D*H)	qty	Series No.	Specification (W*D*H)	qty
1	900*600*25	1	6			11		
2	594*695*18	1	7			12		
3	879*695*18	1	8			13		
4		1	9			14		
5			10			15