SDC-105 Main Board

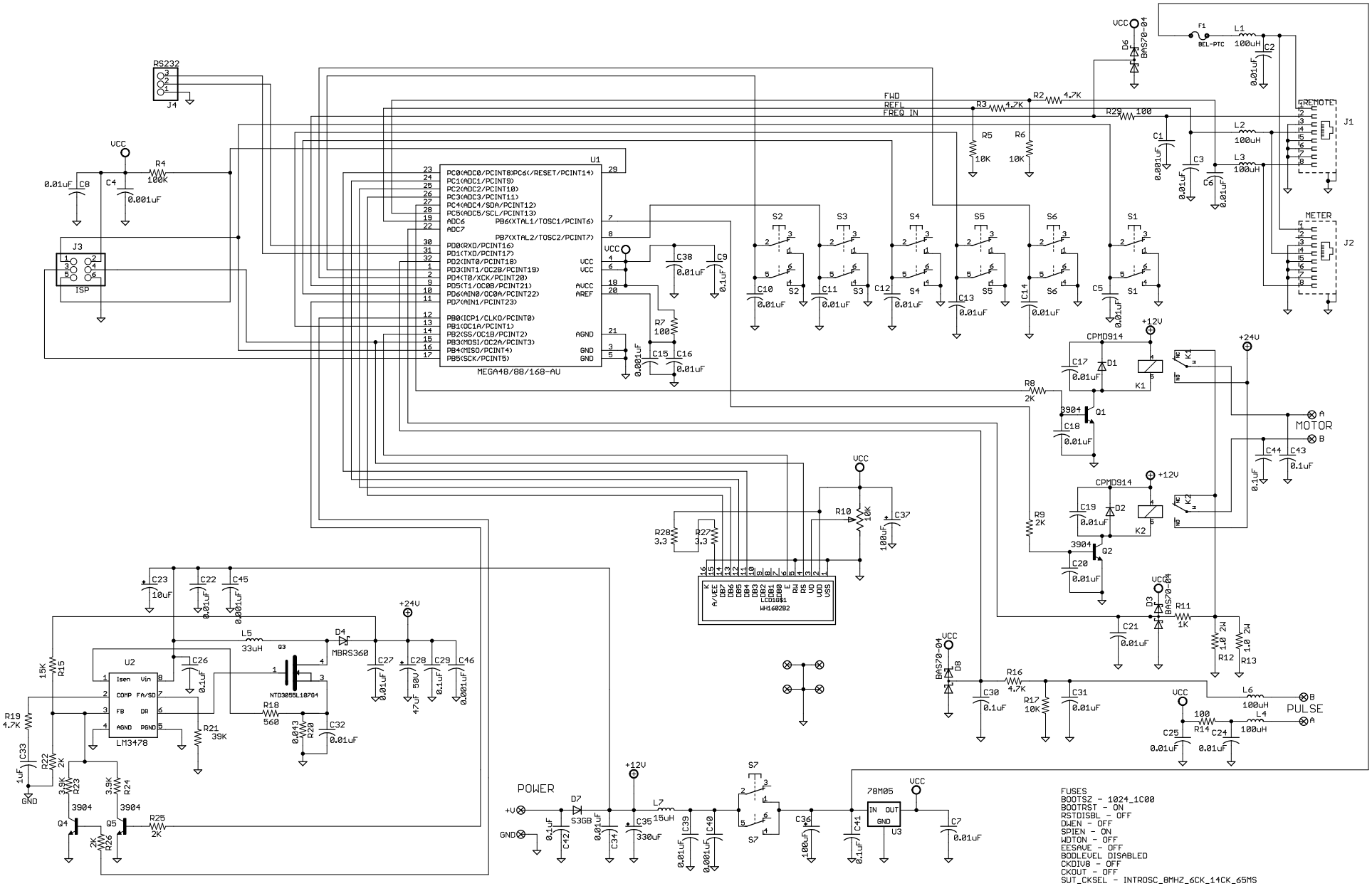
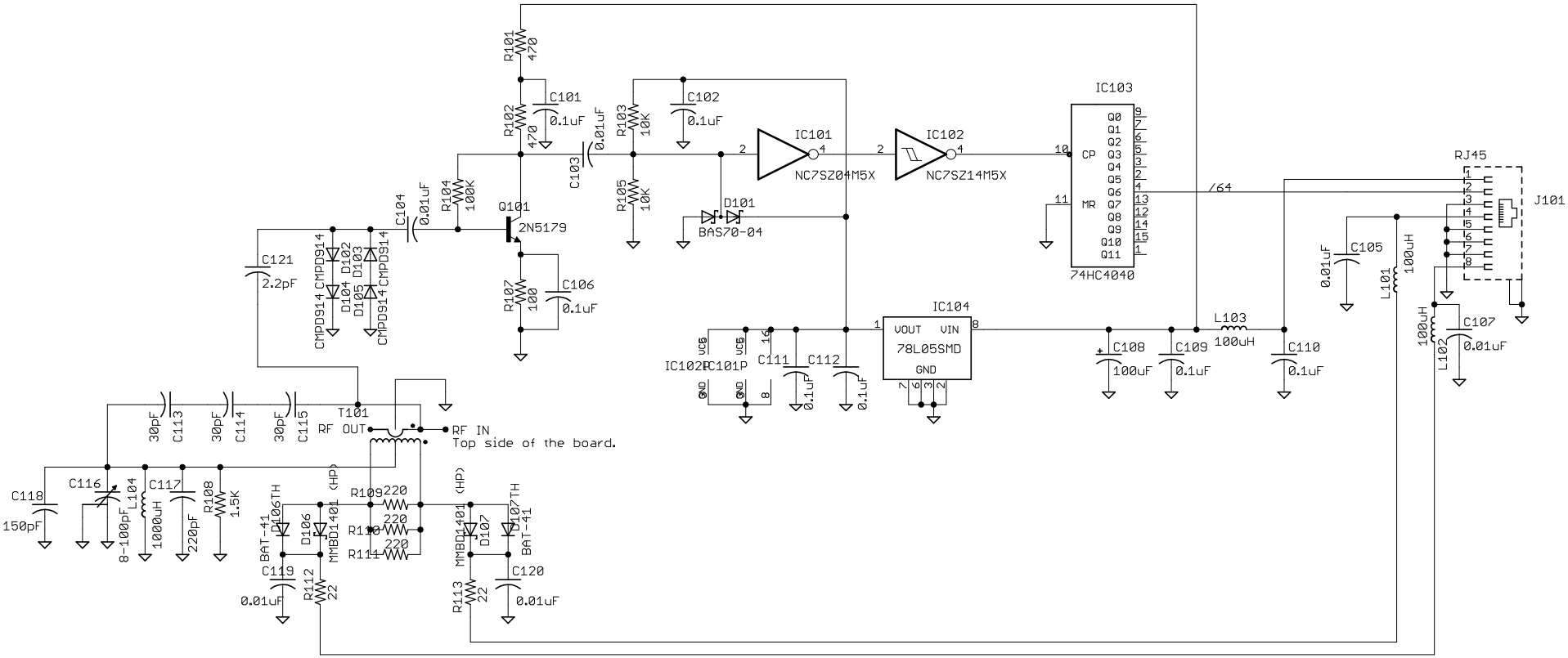
SDC-105 Sensor Board