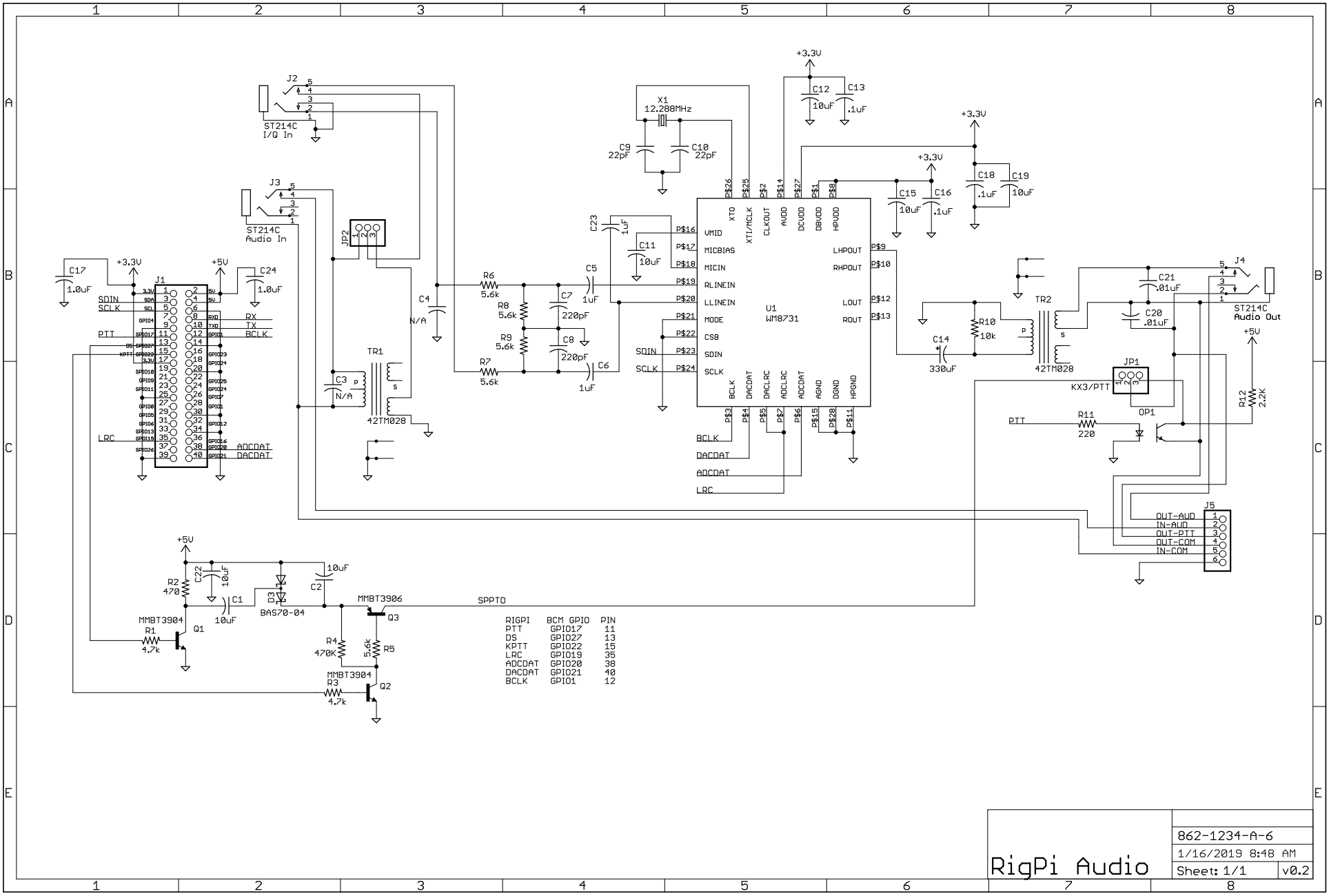
J2
ST214C
I/Q In
J3
ST214C
Audio In
J1
J4
ST214C
Audio Out
J5
OUT-AUD
IN-AUD
OUT-PTT
OUT-COM
IN-COM
X1
12.288MHz
C9
22pF
C10
22pF
U1
WM8731
XTO
XTI/MCLK
CLKOUT
AVDD
DCVDD
DBVDD
HPVDD
VMID
MICBIAS
MICIN
RLINEIN
LLINEIN
MODE
CSB
SDIN
SCLK
LHPOUT
RHPOUT
LOUT
ROUT
BCLK
DACDAT
DACLRC
ADCLRC
ADCDAT
AGND
DGND
HPGND
LRC
TR1
42TM028
TR2
42TM028
JP1
KX3/PTT
JP2
OP1
Q1
MMBT3904
Q2
MMBT3904
Q3
MMBT3906
D3
BAS70-04
SPPTO
PTT
RX
TX
BCLK
ADCDAT
DACDAT
+3.3V
+5V
RIGPI BCM GPIO PIN
PTT GPIO17 11
DS GPIO27 13
KPTT GPIO22 15
LRC GPIO19 35
ADCDAT GPIO20 38
DACDAT GPIO21 40
BCLK GPIO1 12
RigPi Audio
862-1234-A-6
1/16/2019 8:48 AM
Sheet: 1/1
v0.2

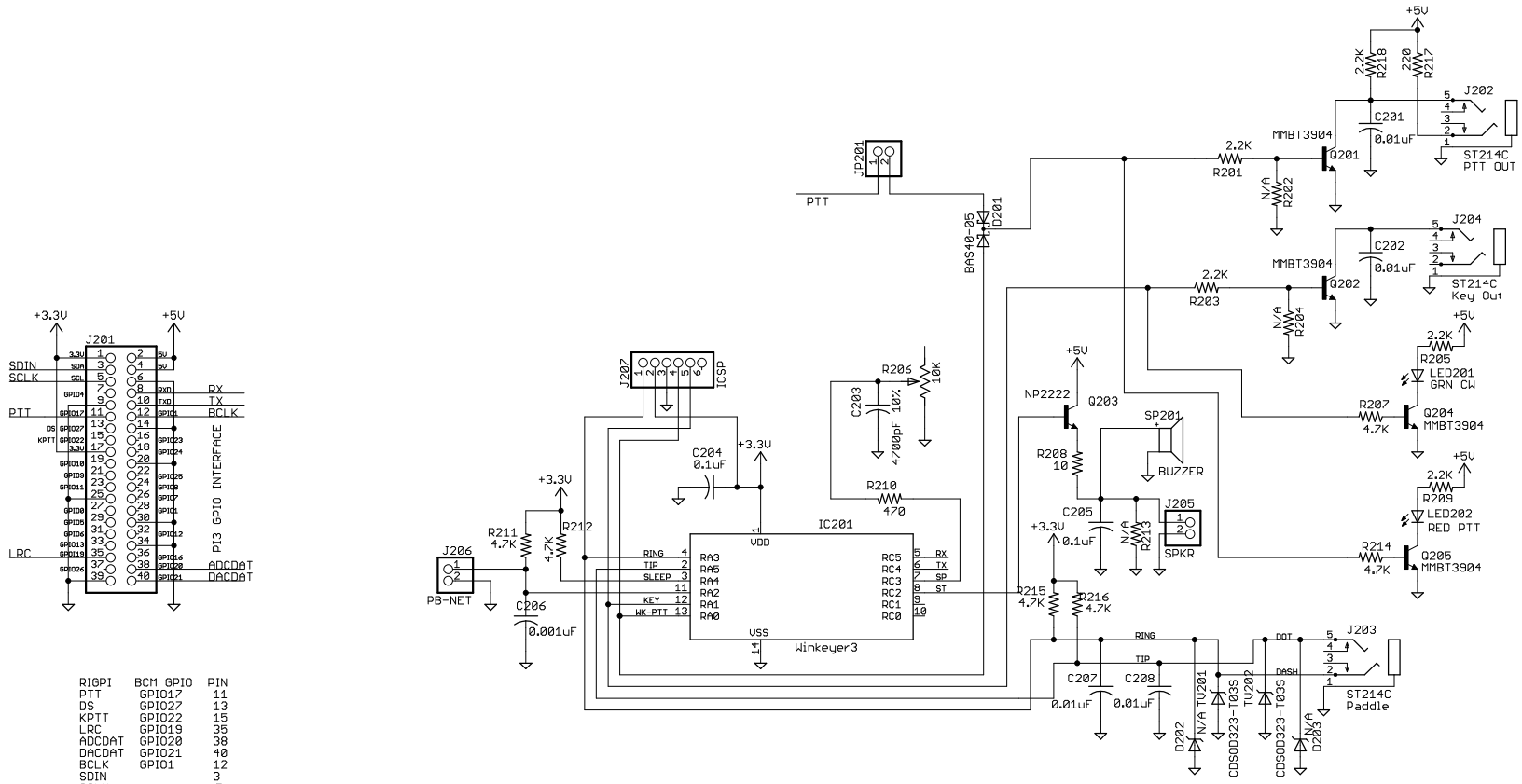

RIGPI	BCM GPIO	PIN
PTT	GPIO17	11
DS	GPIO27	13
KPTT	GPIO22	15
LRC	GPIO19	35
ADCDAT	GPIO20	38
DACDAT	GPIO21	40
BCLK	GPIO1	12
SDIN		3
SCLK		5
RXD		8
TXD		10

RigPi Keyer

862-1234-K-7

1/16/2019 7:51 AM

Sheet: 1/1

v0.6