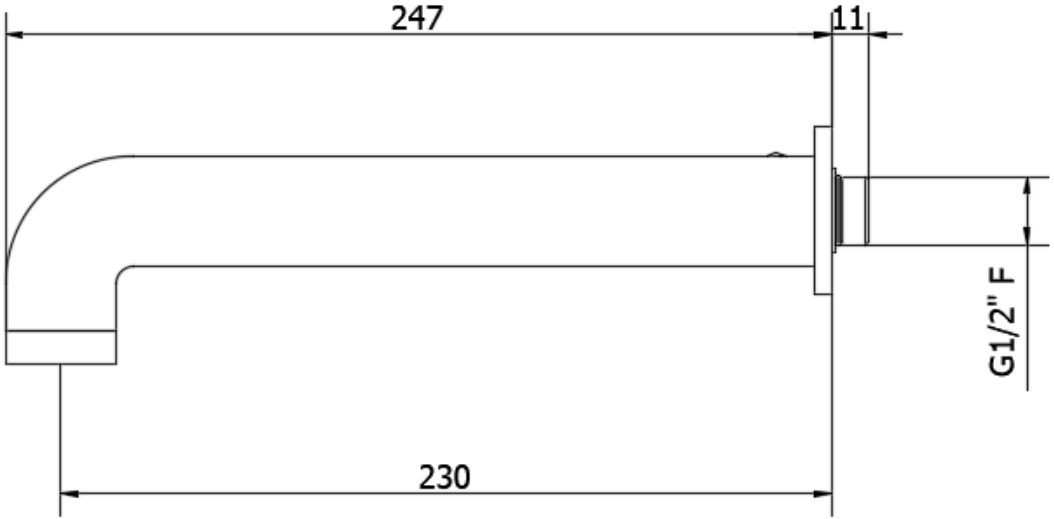

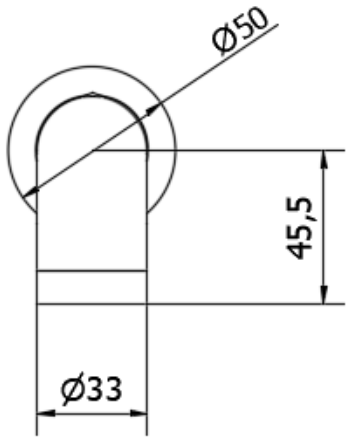

UB0370WC/U/L/Q/B

crosswater